ASSEMBLY INSTRUCTION

DESCRIPTION

1003OAK

Byron Large Sideboard

1.5hr

APPROXIMATE ASSEMBLY TIME

2 PERSON ASSEMBLY

FLOOR AREA 2MX2M

REQUIRED ASSEMBLY SPACE

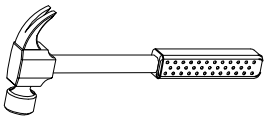

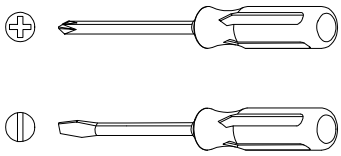

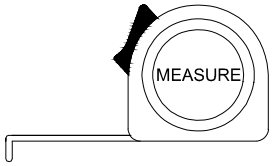

REQUIRED ASSEMBLY TOOLS

ASSEMBLED DIMENSIONS

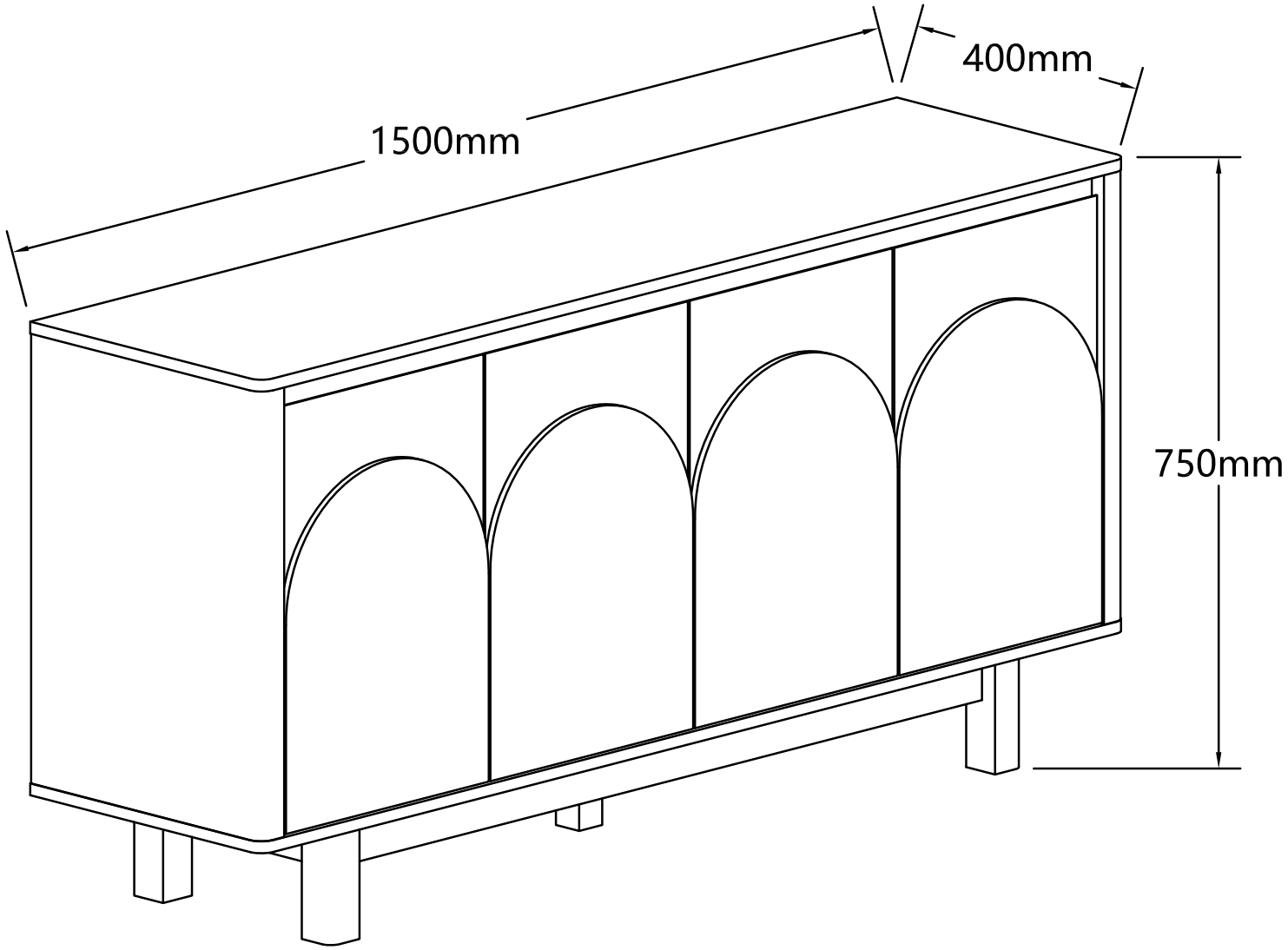

ASSEMBLY INSTRUCTION

DESCRIPTION
1003 OAK
Byron Large Sideboard

WARNING : ENSURE THE WALL STRAP IS ATTACHED TO AVOID SERIOUS INJURY OR DEATH.

To avoid any serious or fatal injury, a wall strap has been provided with this product to prevent toppling. Always secure this product with an anchor device to the wall or suitable surface. Wall fixing hardware are not included since different surface materials require different attachments. Please seek professional advice if you are in doubt of what fixing device to use.

Your product has been provided with a permanent safety label that should never be removed for safety reasons.



ASSEMBLY INSTRUCTION

DESCRIPTION

1003OAK

Byron Large Sideboard

PARTS LIST

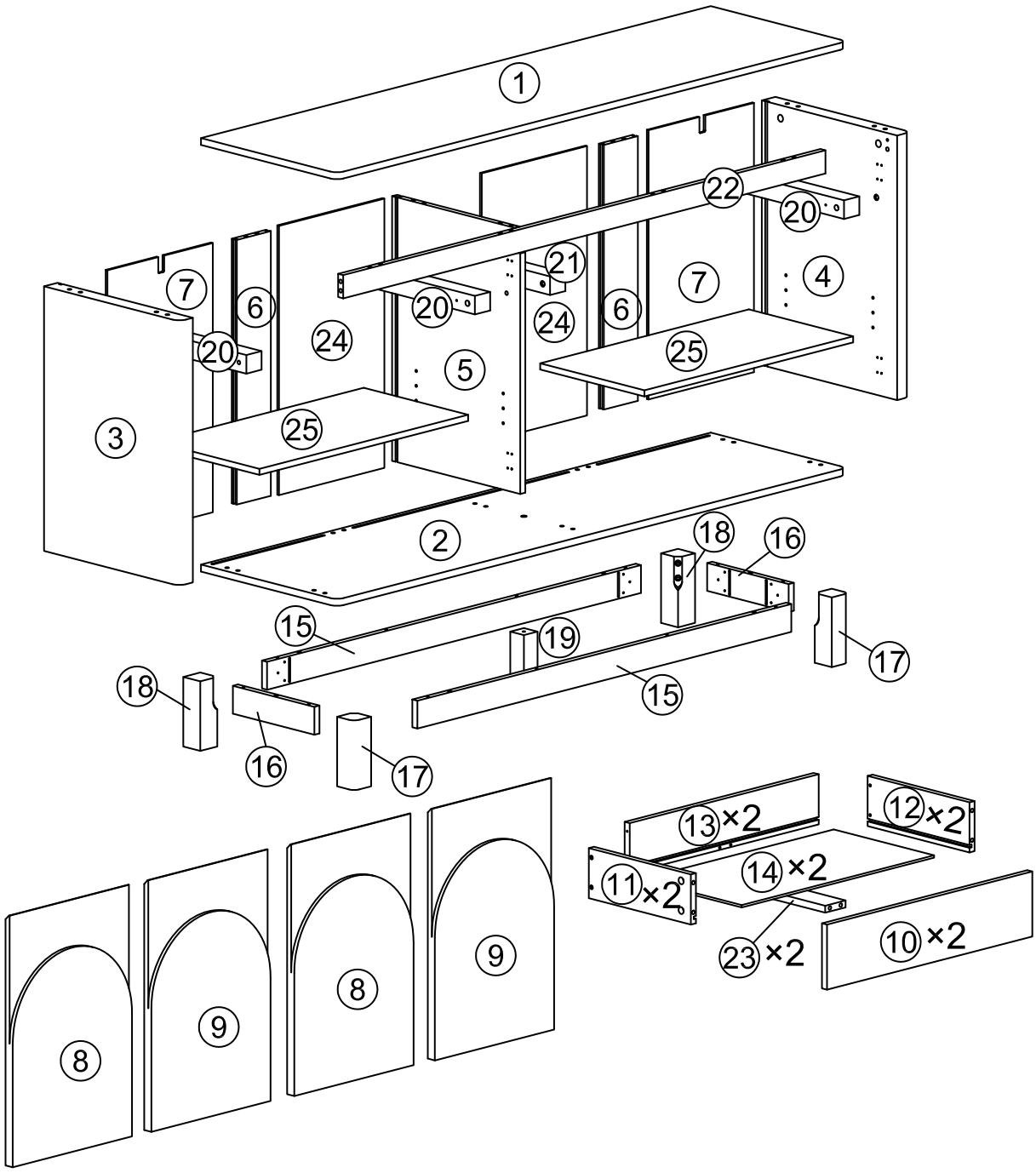

NO.PARTS LIST	QTY
(1) Part 1	1
(2) Part 2	1
(3) Part 3	1
(4) Part 4	1
(5) Part 5	1
(6) Part 6	2
(7) Part 7	2
(8) Part 8	2
(9) Part 9	2
(10) Part 10	2
(11) Part 11	2
(12) Part 12	2
(13) Part 13	2

NO PARTS LIST	QTY
(14) Part 14	2
(15) Part 15	2
(16) Part 16	2
(17) Part 17	2
(18) Part 18	2
(19) Part 19	1
(20) Part 20	3
(21) Part 21	1
(22) Part 22	1
(23) Part 23	2
(24) Part 24	2
(25) Part 25	2

ASSEMBLY INSTRUCTION

DESCRIPTION

1003OAK

Byron Large Sideboard

HARDWARE LIST

A x28	B x28	C x24	D x11	E x4	G x80	H x14
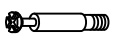				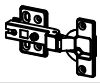		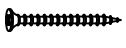
M6x35mm	Φ15mm	Φ8x30mm	M7x50mm		M3.5*12mm	M4*35mm

I x8	J x14	K x16	L x4	M x12	N x1	O x1	P1 x2
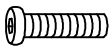			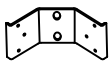				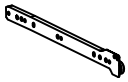
M6*35mm	ϕ20			M4*60mm	4#		300mm

P2 x2	Q1 x2	Q2 x2	R x24	S x4	T x2	U x4	V x2
		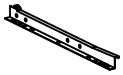		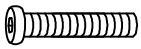	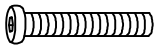		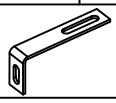
300mm	300mm	300mm	M3.5x14mm	M6*50mm	M6*65mm		

W x2	X x2	Y x8
		
M4.5x12mm		

ASSEMBLY INSTRUCTION

DESCRIPTION
1003OAK
Byron Large Sideboard

Top Tips before you start!

1. Please check that all parts are present before you start the assembly of your furniture, as once assembled,the furniture is exempt from our home approval policy.

2. For ease and speed of assembly,we recommend that before you commence each step of the assembly,that you identify all the parts required for that step.

3. For larger items,please ensure that you have sufficient space and people(as indicated on page 1) to assemble your product safely.

4. We recommend that,where possible,all items are assembled near to the area in which they will be placed in use,to avoid moving the product unnecessarily once assembled.

5. For the protection of your furniture,particularly items of high gloss finish,we recommend that the product is placed on a protected surface during assembly to prevent any damage.

6. During assembly please take care not to over-tighten any fittings,as this may damage the product.

Care and Maintenance of your Furniture

- Please periodically check all fittings and re-tighten as necessary.
- Please do not drag or pull your furniture.
- Wipe occasionally with a soft cloth slightly dampened with water.Then buff with a dry clean soft cloth.
- Never allow any kind of liquid to remain on your furniture.Absorption can cause wood to warp or finishes to de-laminate.
- Please do not sit or stand on this item.

SPECIAL TIPS FOR FITTING CAM-LOCKS AND CAM-BOLTS

CAM-LOCK

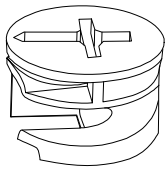

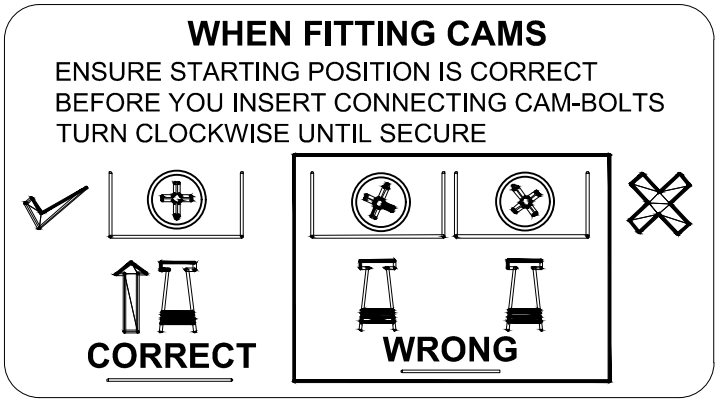

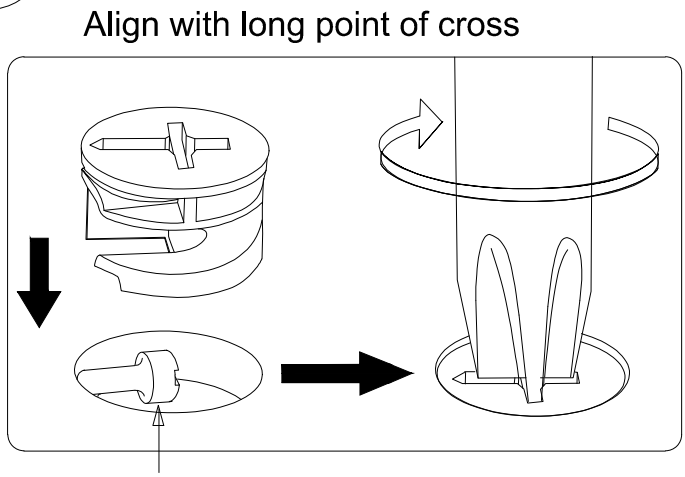

CAM-BOLT

Tighten until shoulder is flush with panel.Do not overtighten or undertighten (see example below)

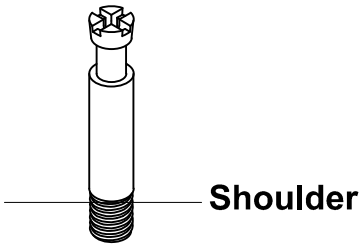

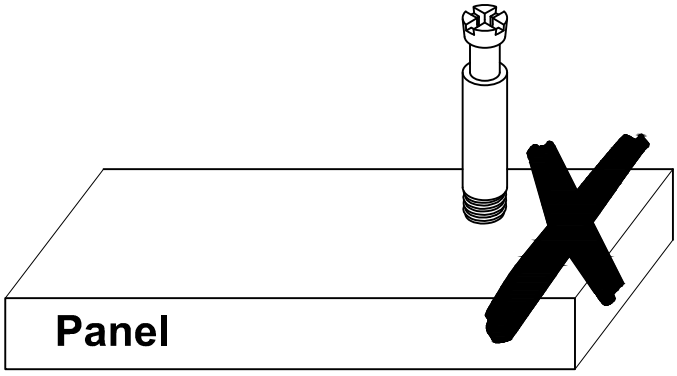

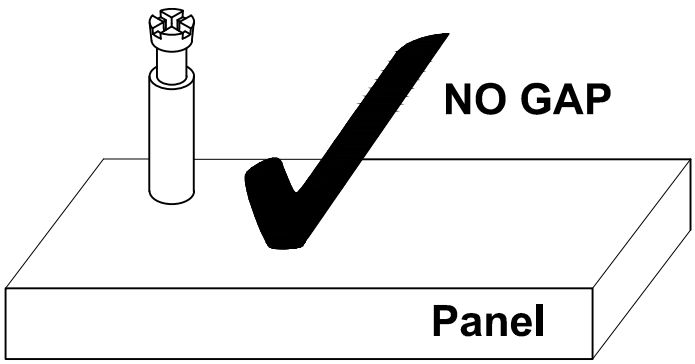

ASSEMBLY INSTRUCTION

DESCRIPTION

1003OAK

Byron Large Sideboard

STEP 1

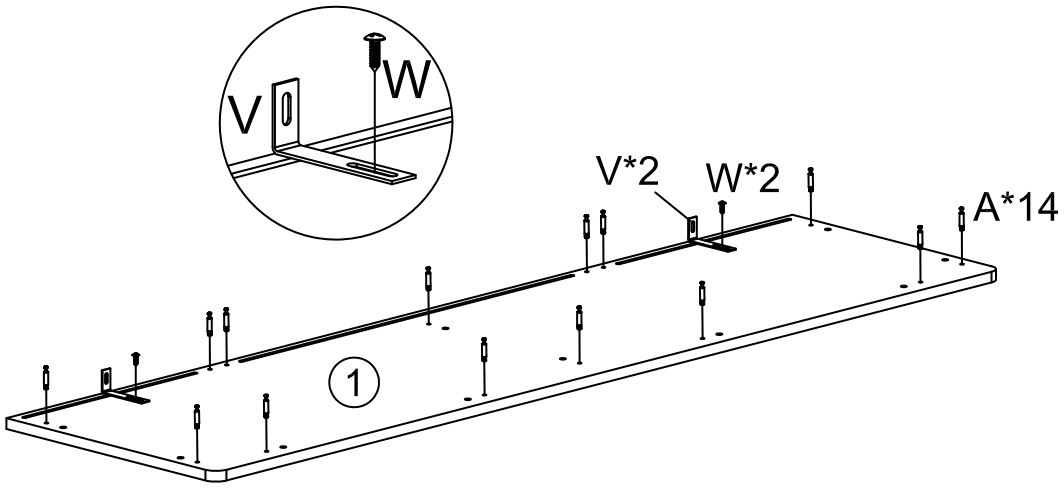

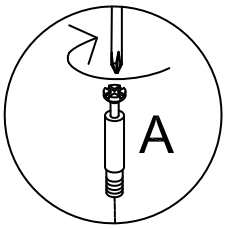

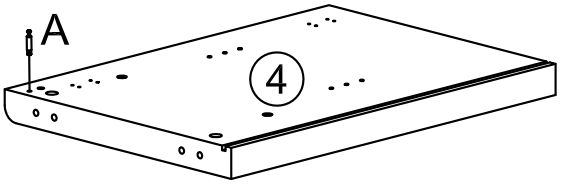

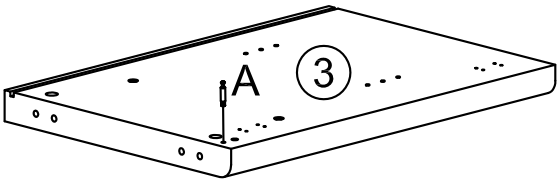

A	x16	V	x2	W	x2
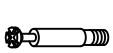		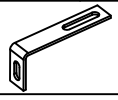			
M6x35mm				M4.5x12mm	

ASSEMBLY INSTRUCTION

DESCRIPTION

1003OAK

Byron Large Sideboard

STEP 2

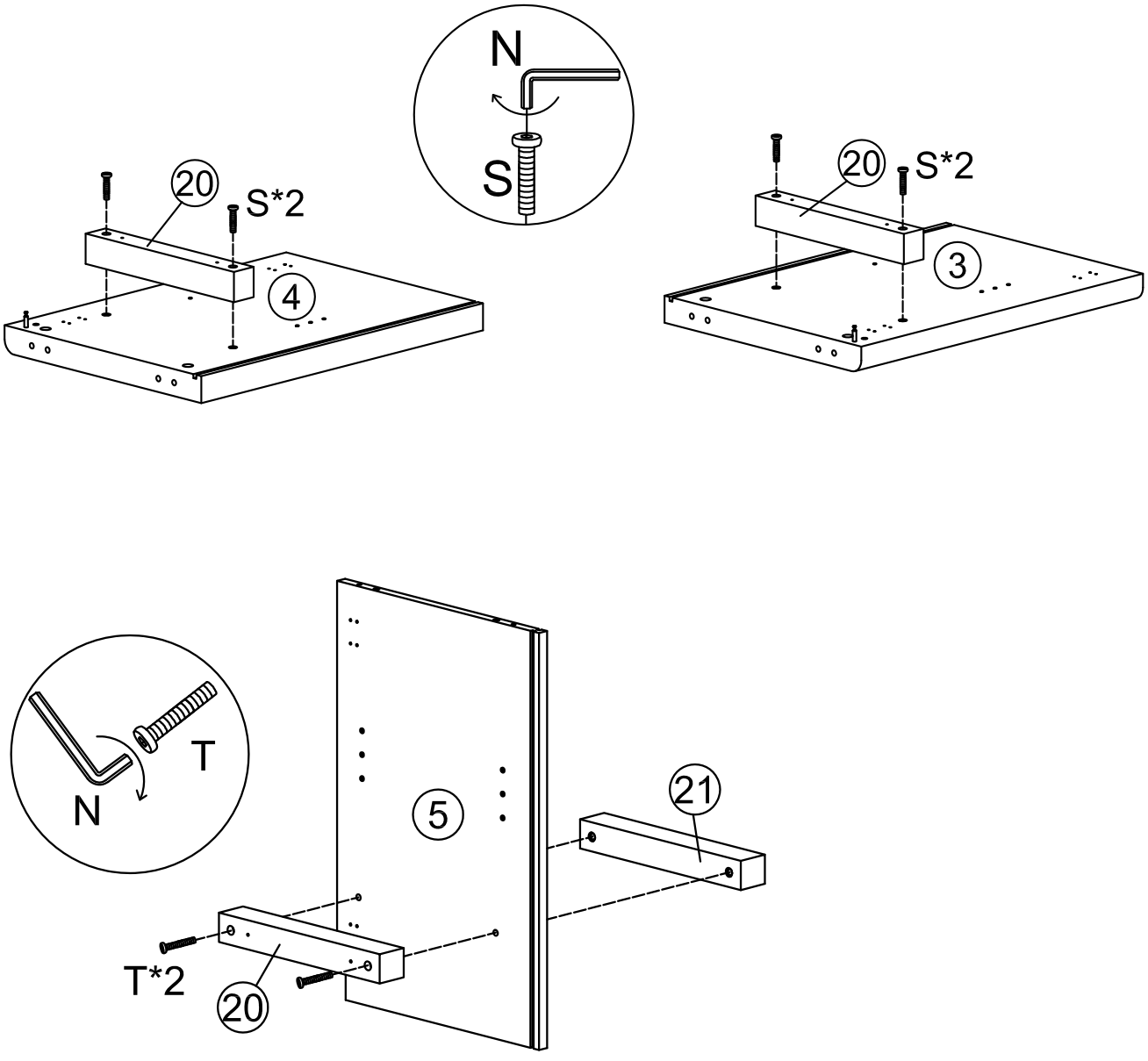

N	x1	S	x4	T	x2
		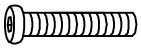		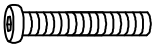	
4#		M6*50mm		M6*65mm	

ASSEMBLY INSTRUCTION

DESCRIPTION

1003OAK

Byron Large Sideboard

STEP 3

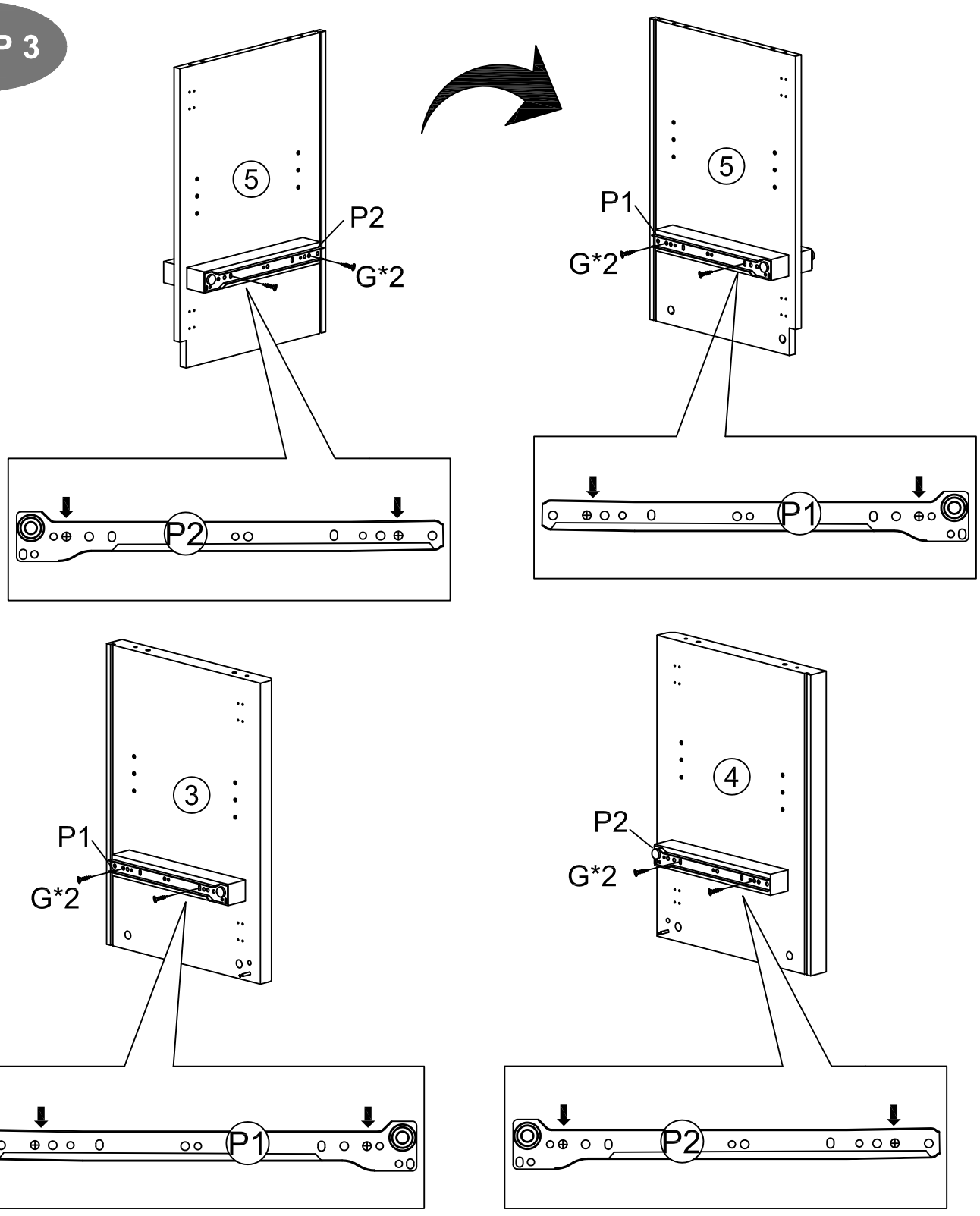

G	x8	P1	x2	P2	x2
M3.5*12mm		300mm		300mm	

ASSEMBLY INSTRUCTION

DESCRIPTION

1003OAK

Byron Large Sideboard

STEP 4

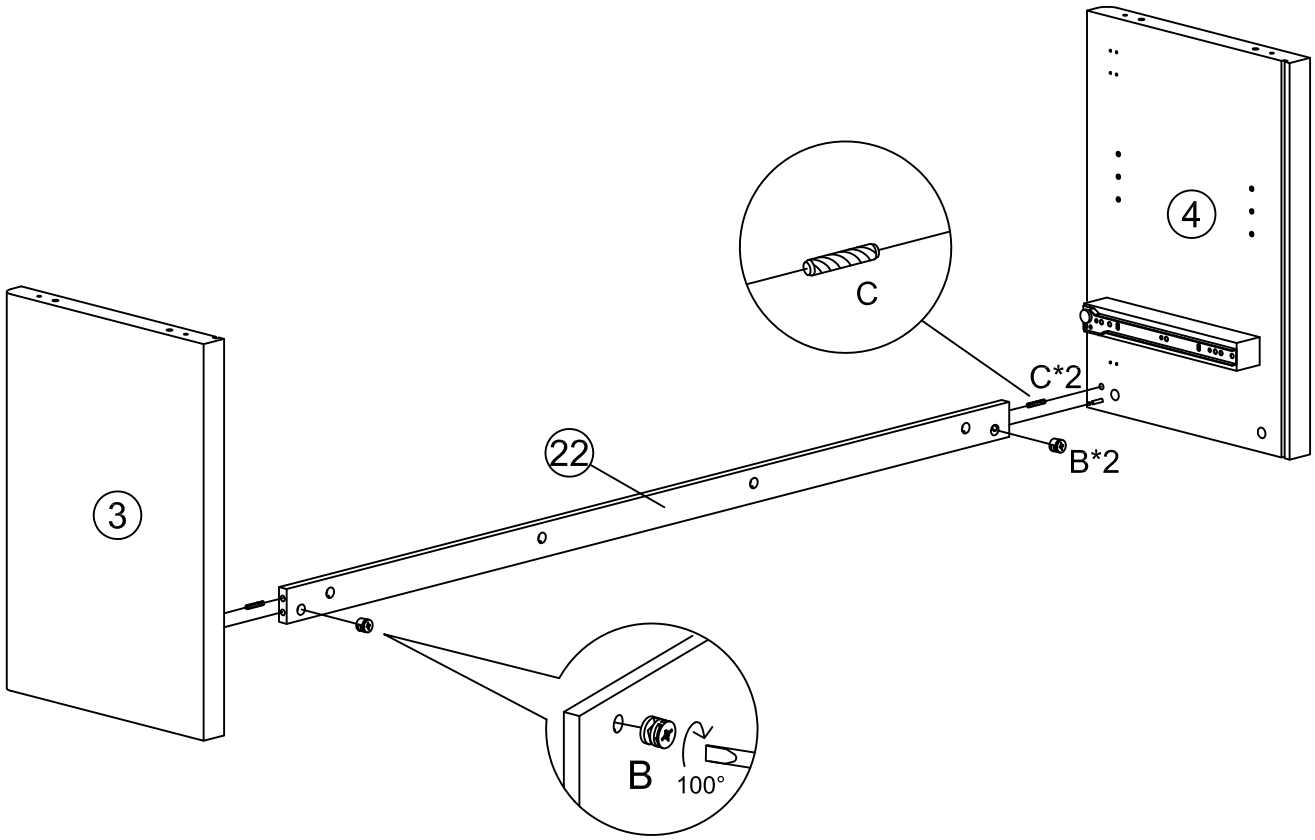

B	x2	C	x2
			
Φ15mm		Φ8x30mm	

ASSEMBLY INSTRUCTION

DESCRIPTION

1003OAK

Byron Large Sideboard

STEP 5

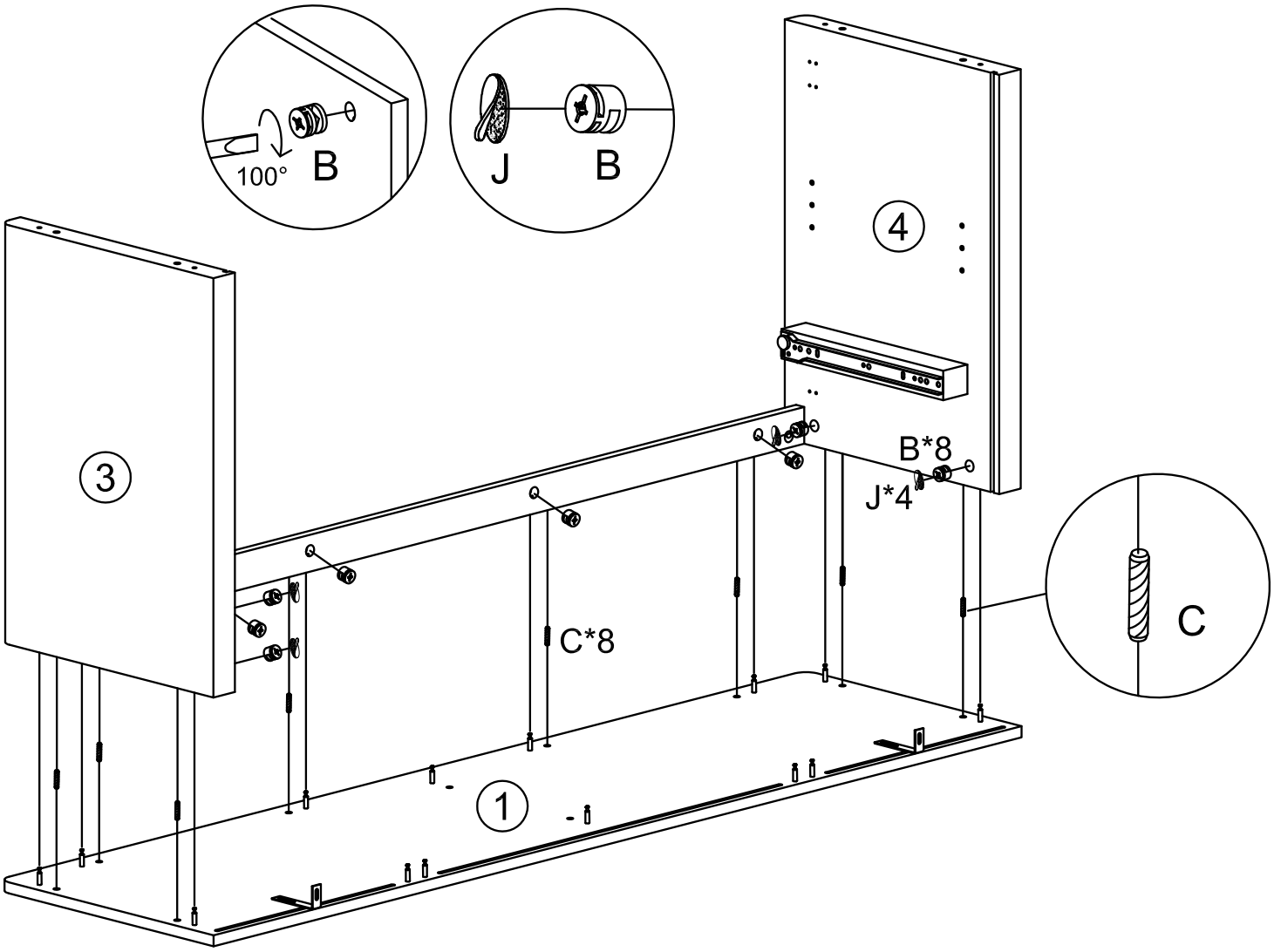

B	x8	C	x8	J	x4
		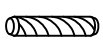			
Φ15mm		Φ8x30mm		ø20	

ASSEMBLY INSTRUCTION

DESCRIPTION

1003OAK

Byron Large Sideboard

STEP 6

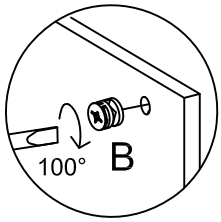

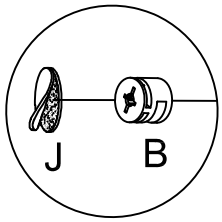

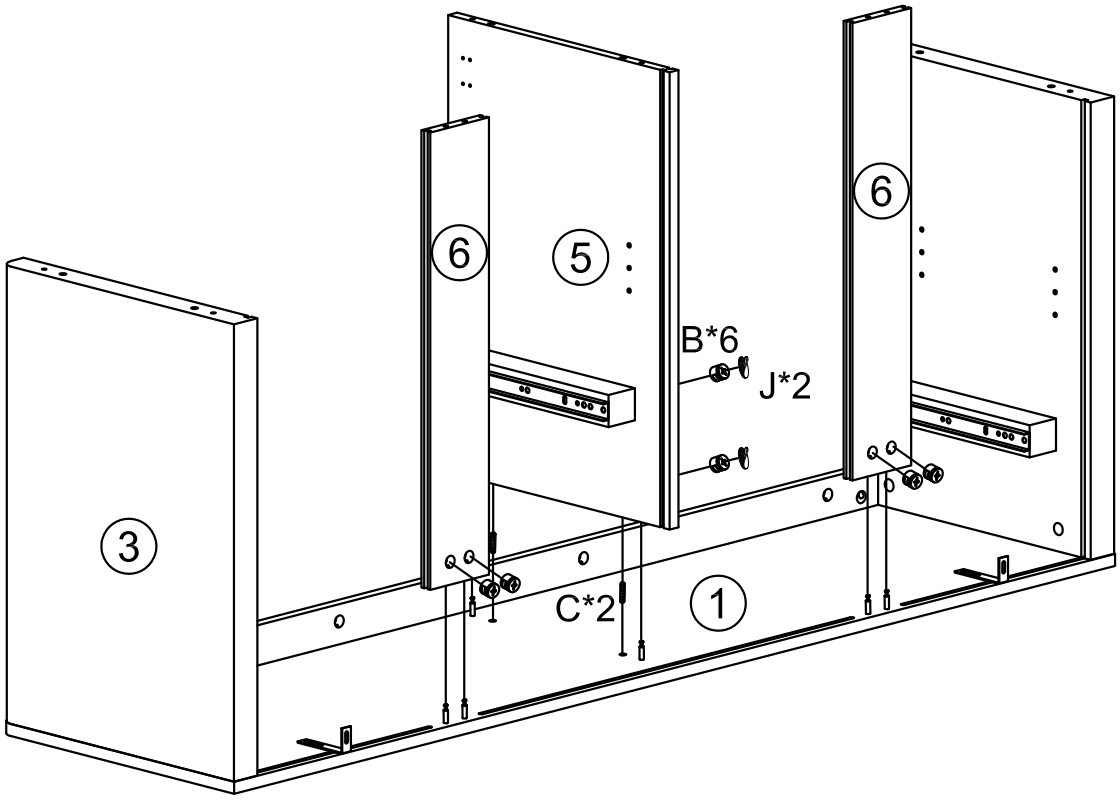

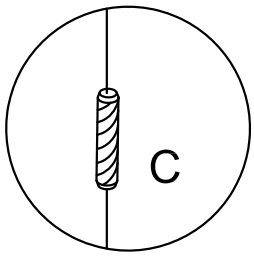

B	x6	C	x2	J	x2
		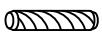			
Φ15mm		Φ8x30mm		ϕ20	

ASSEMBLY INSTRUCTION

DESCRIPTION

1003OAK

Byron Large Sideboard

STEP 7

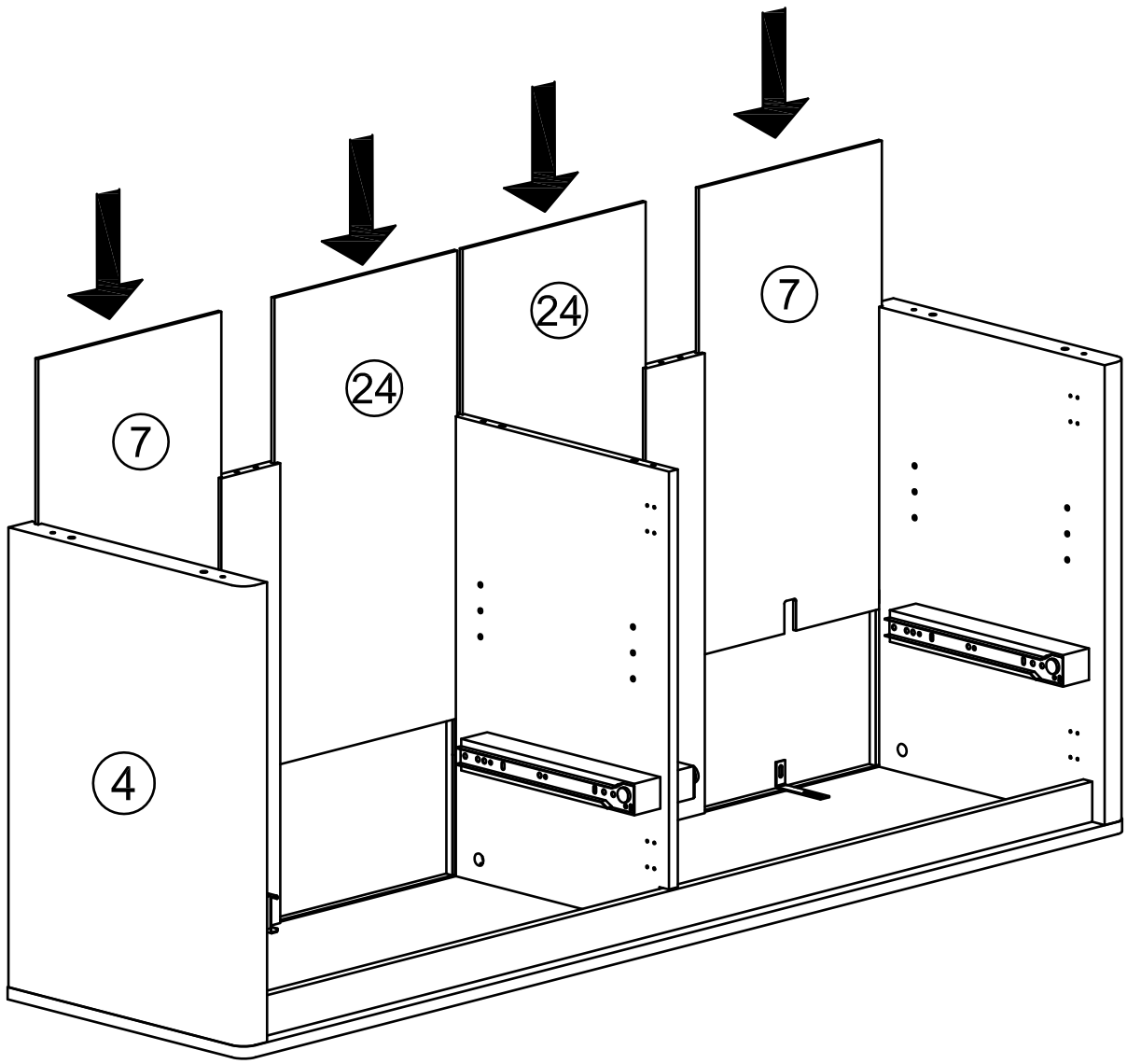

ASSEMBLY INSTRUCTION

DESCRIPTION

1003OAK

Byron Large Sideboard

STEP 8

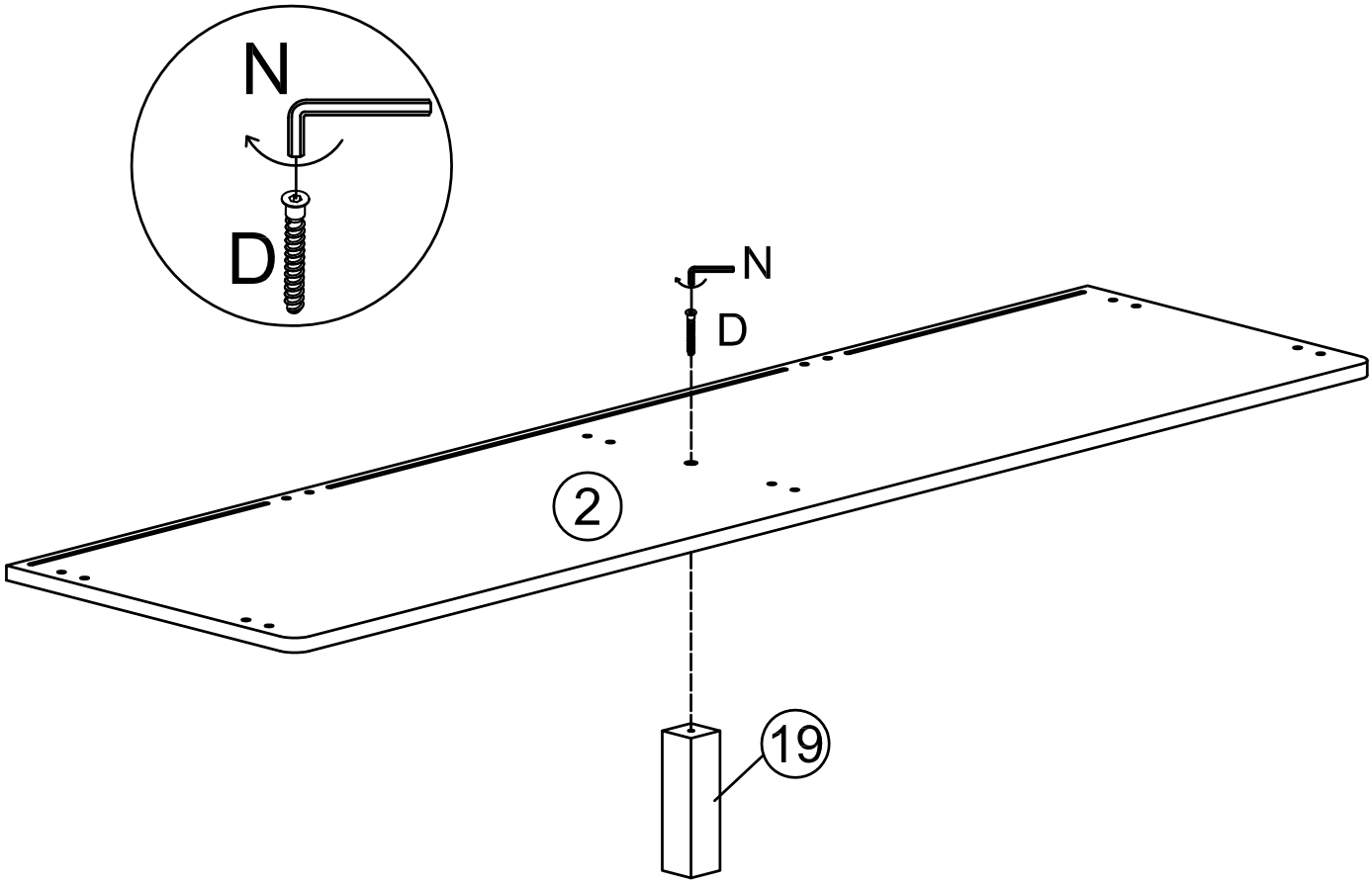

D	x1	N	x1
			
M7x50mm		4#	

ASSEMBLY INSTRUCTION

DESCRIPTION

1003OAK

Byron Large Sideboard

STEP 9

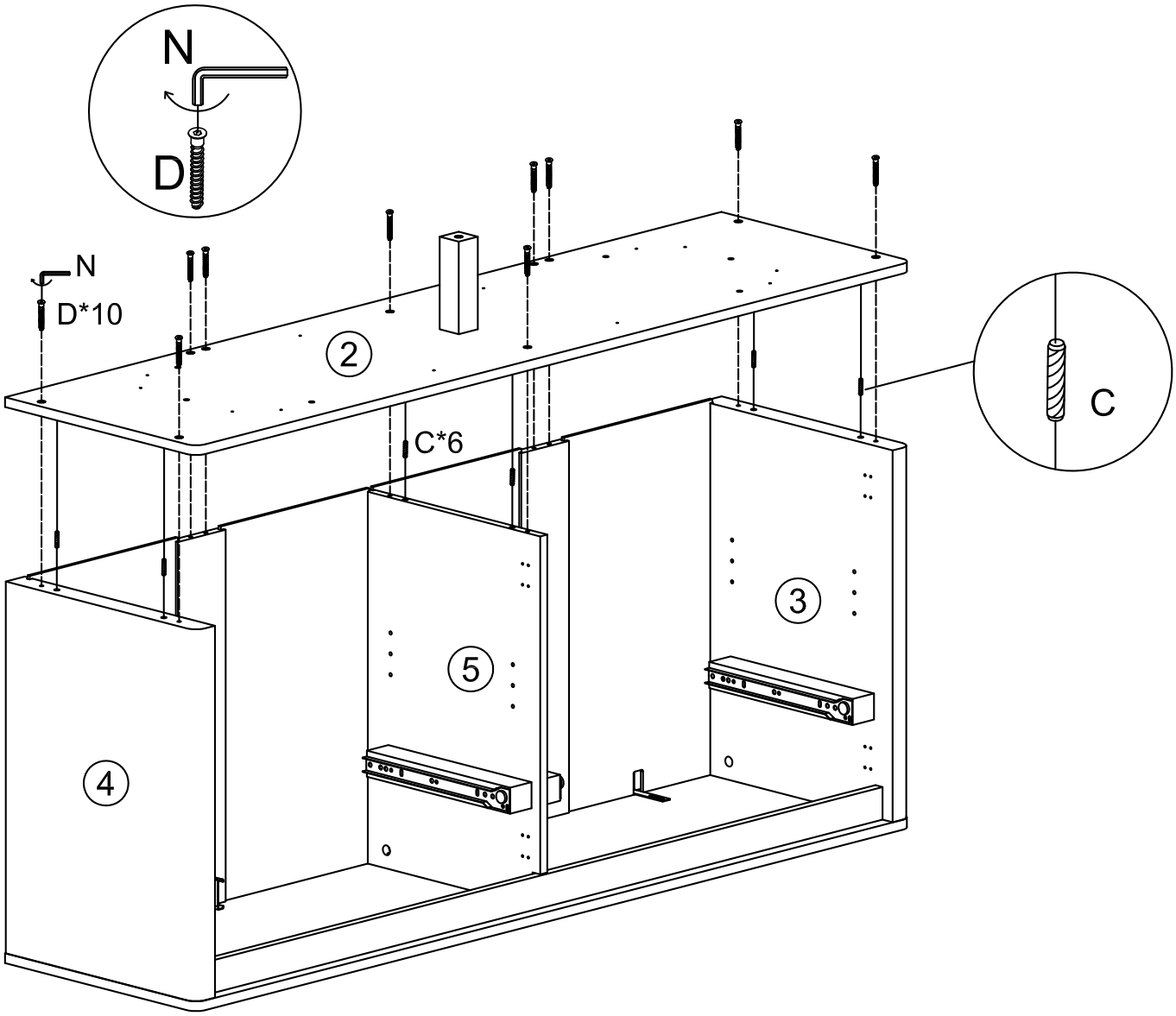

C	x6	D	x10	N	x1
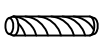				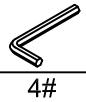	
Φ8x30mm		M7x50mm		4#	

ASSEMBLY INSTRUCTION

DESCRIPTION

1003OAK

Byron Large Sideboard

STEP10

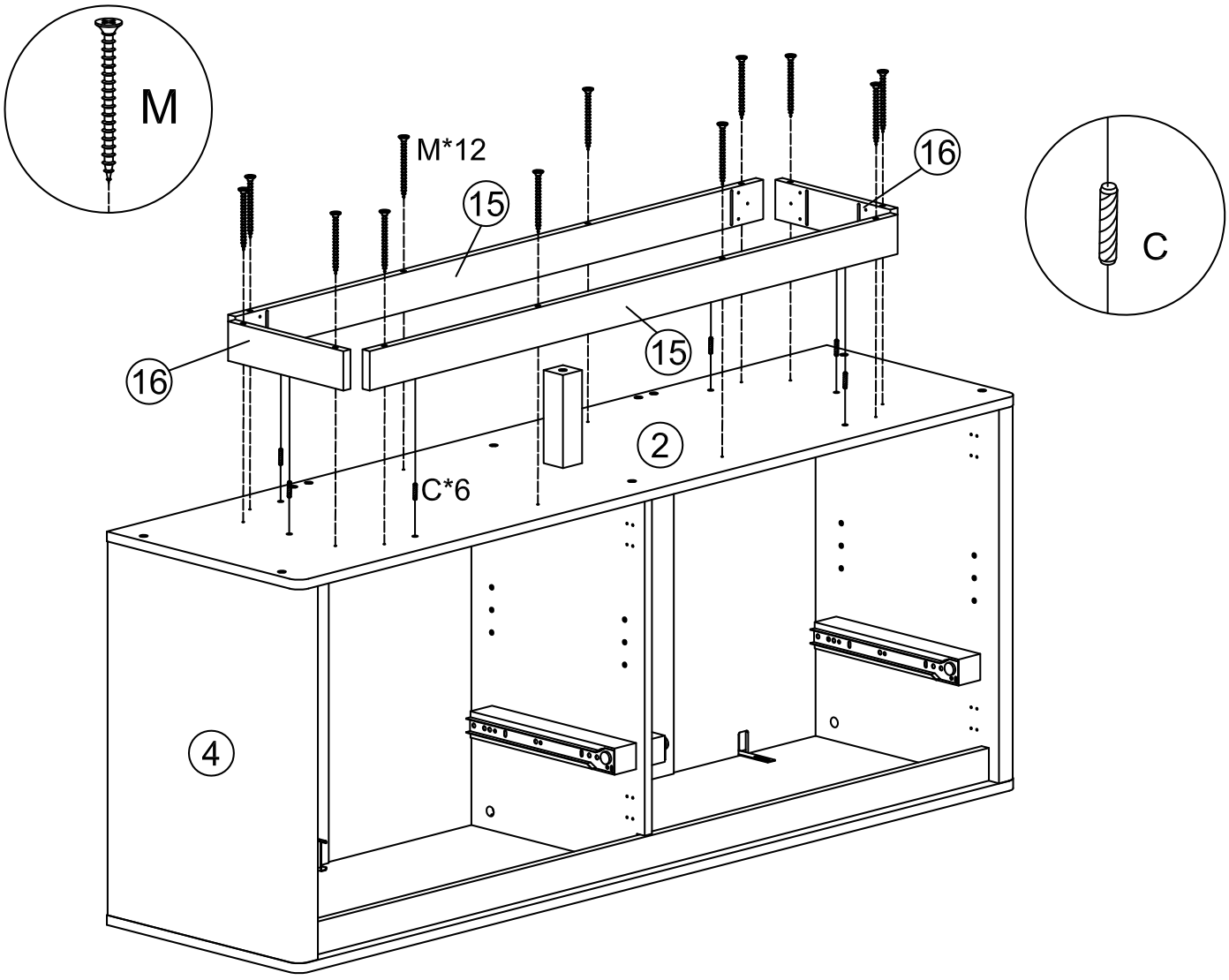

C	x6	M	x12
Φ8x30mm		M4*60mm	

ASSEMBLY INSTRUCTION

DESCRIPTION

1003OAK

Byron Large Sideboard

STEP11

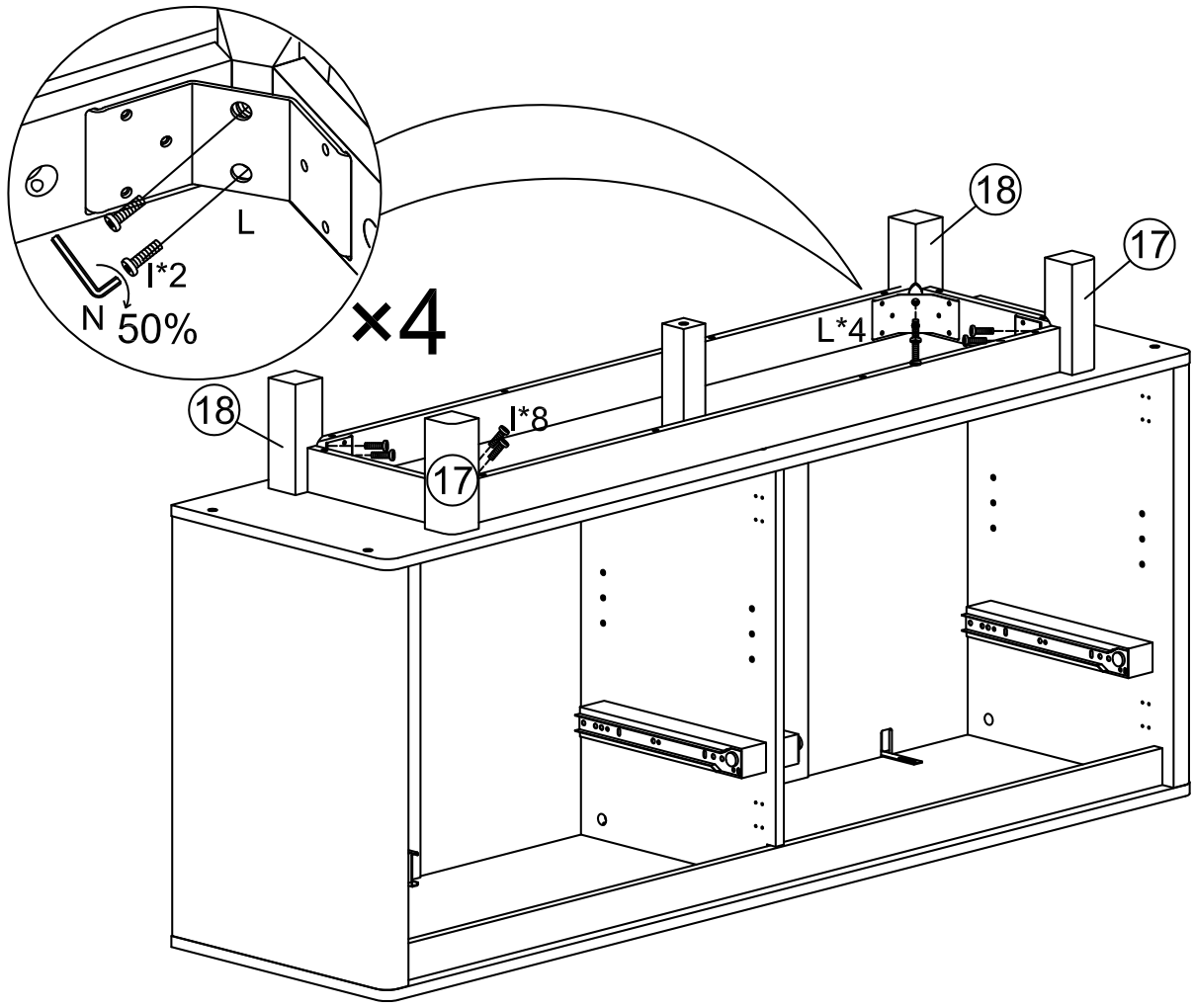

I	x8	L	x4	N	x1
M6*35mm				4#	

ASSEMBLY INSTRUCTION

DESCRIPTION

1003OAK

Byron Large Sideboard

STEP12

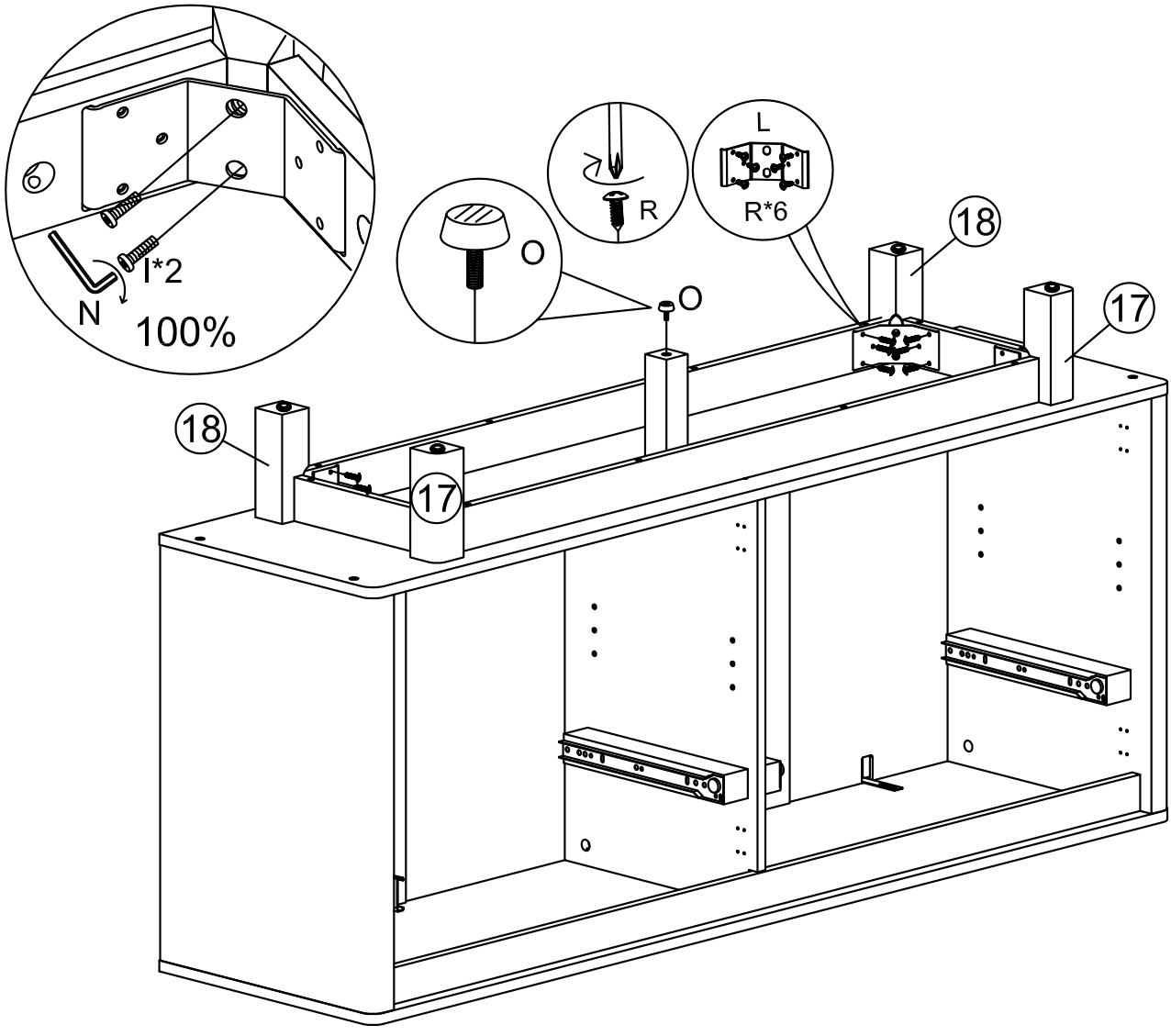

O	x1	R	x24
			M3.5x14mm

ASSEMBLY INSTRUCTION

DESCRIPTION

1003OAK

Byron Large Sideboard

STEP13

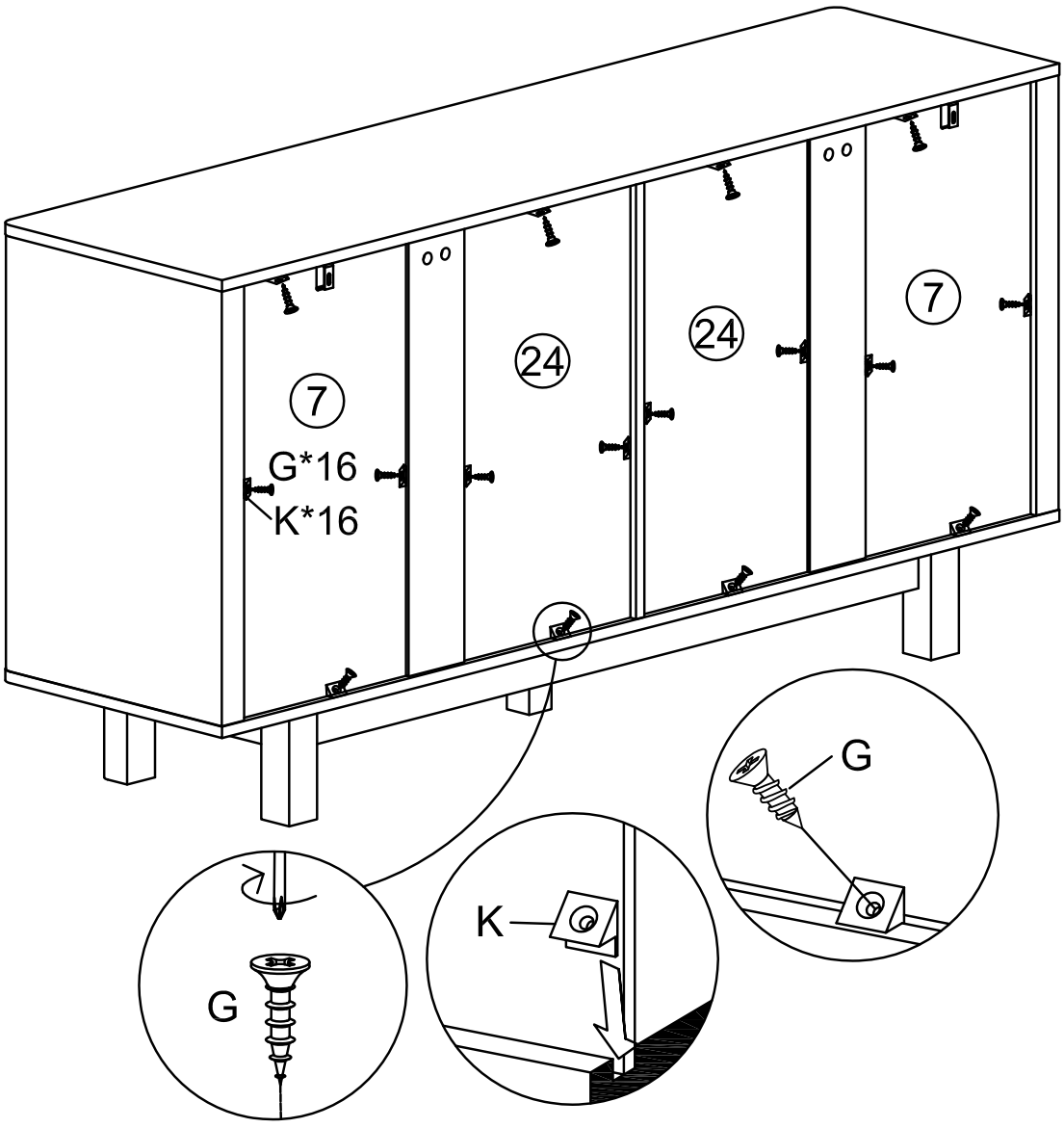

G	x16	K	x16
M3.5*12mm			

ASSEMBLY INSTRUCTION

DESCRIPTION

1003OAK

Byron Large Sideboard

STEP14

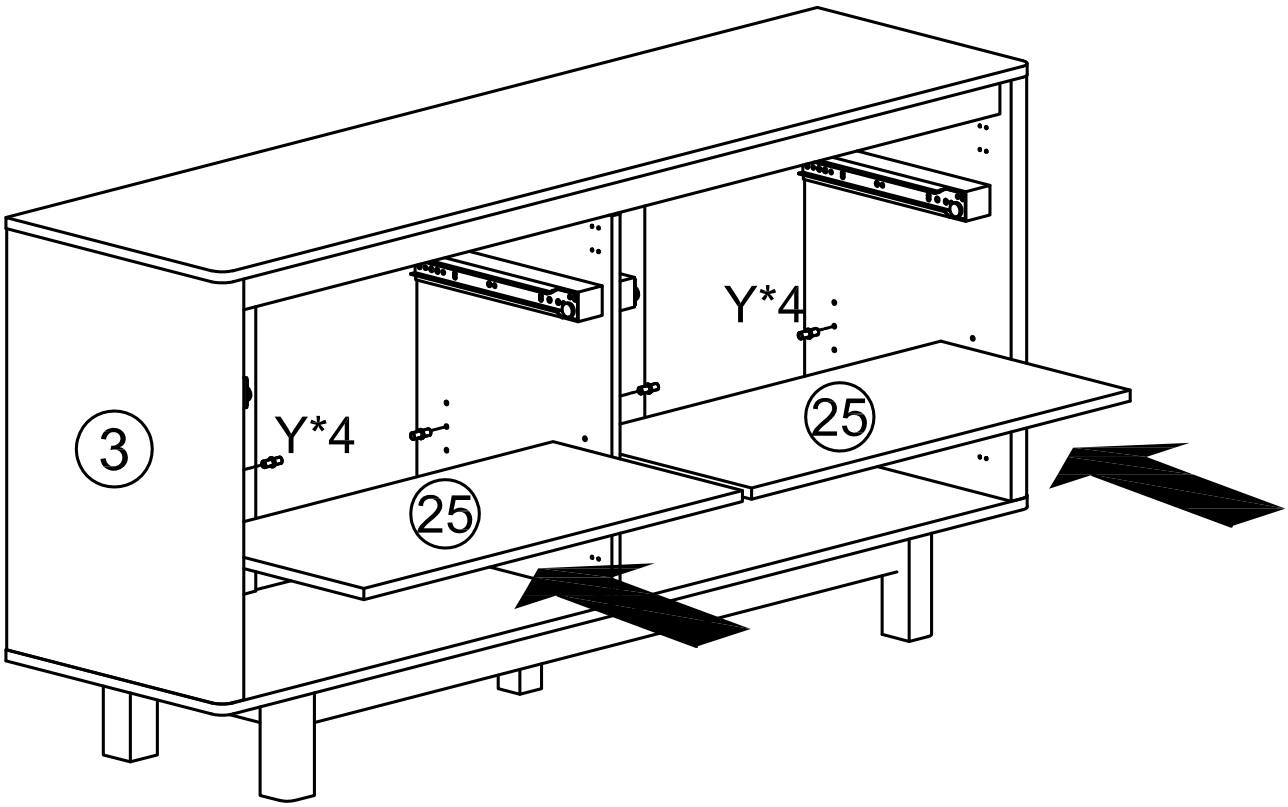

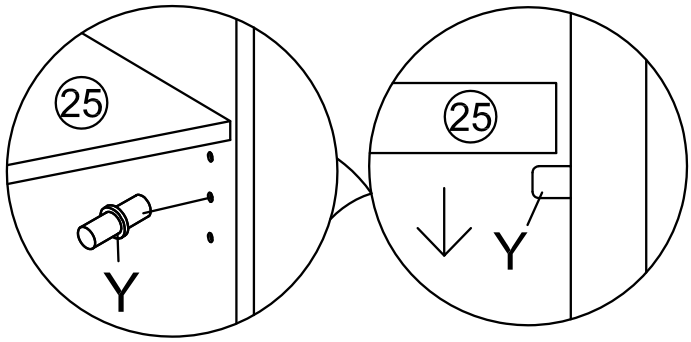

Y	x8
	

ASSEMBLY INSTRUCTION

DESCRIPTION

1003OAK

Byron Large Sideboard

STEP15

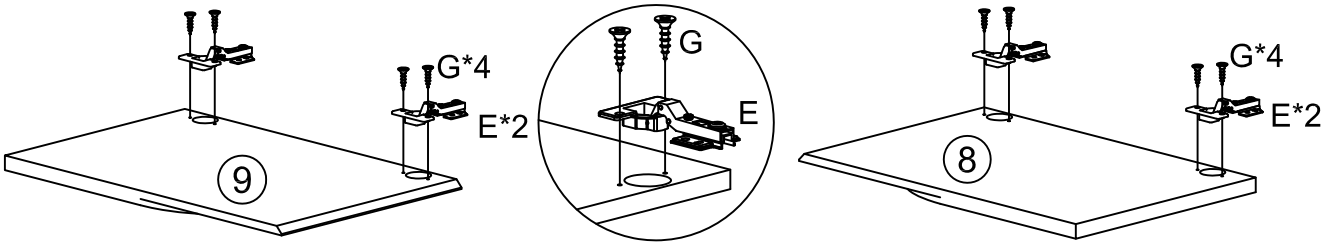

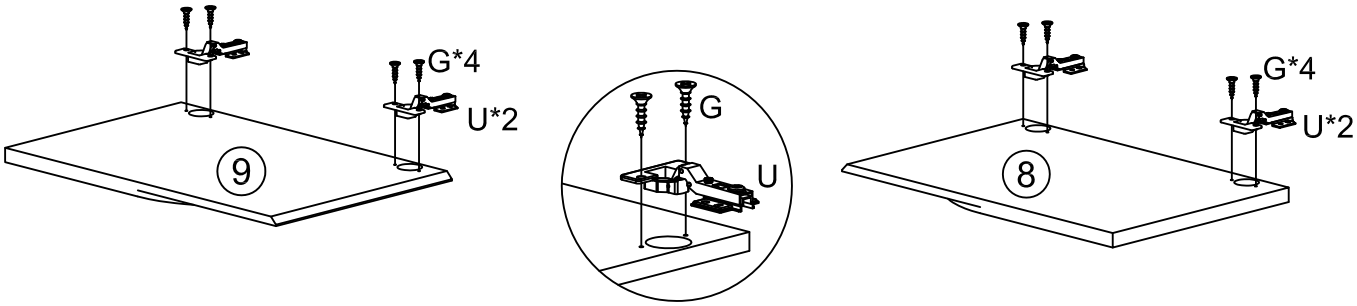

E	x4	G	x16	U	x4
				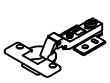	
		M3.5*12mm			

ASSEMBLY INSTRUCTION

DESCRIPTION

1003OAK

Byron Large Sideboard

STEP16

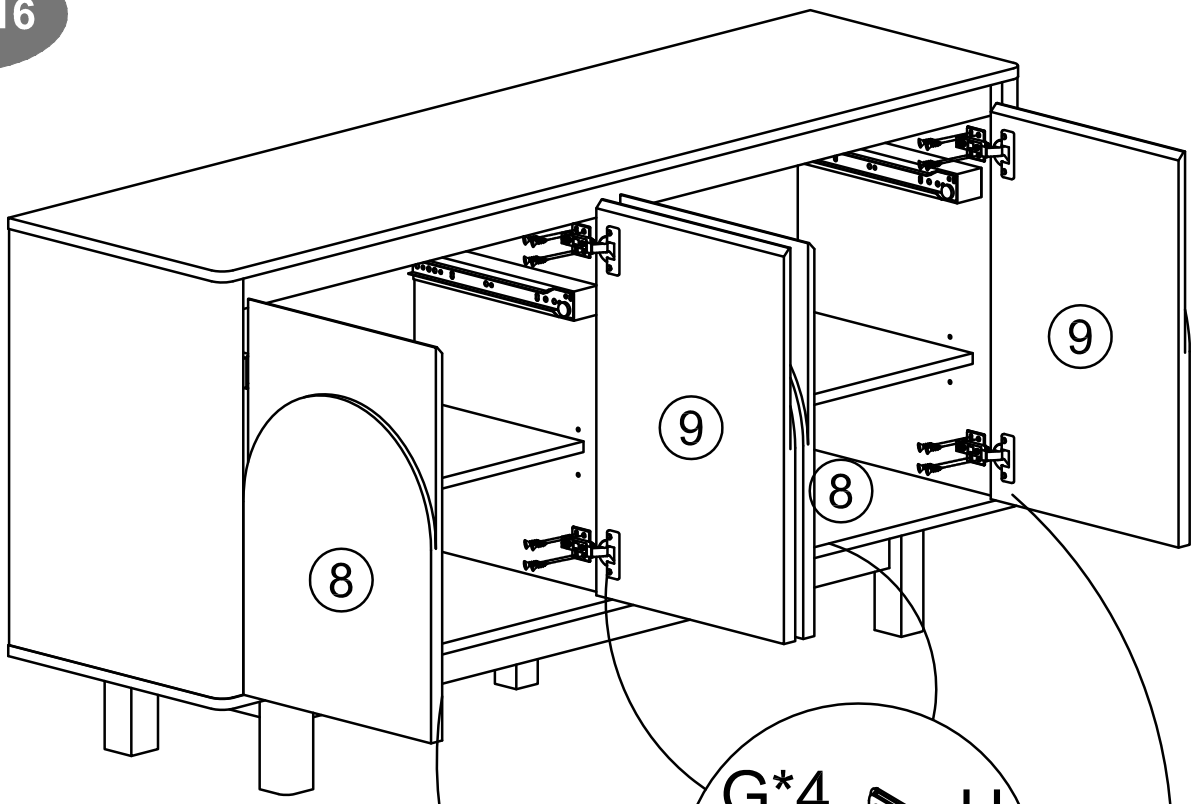

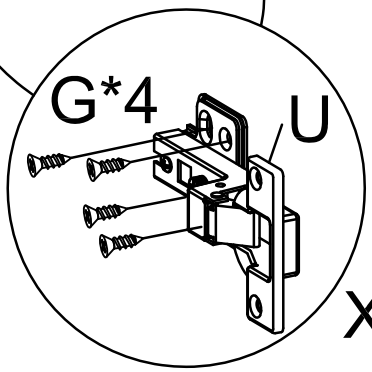

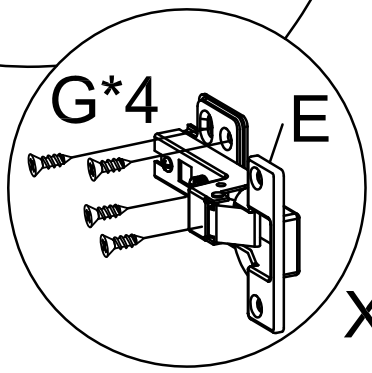

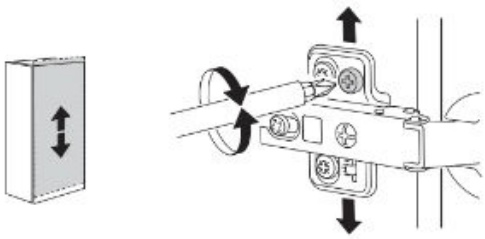

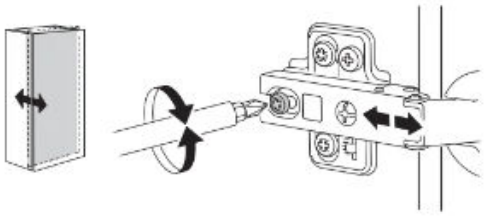

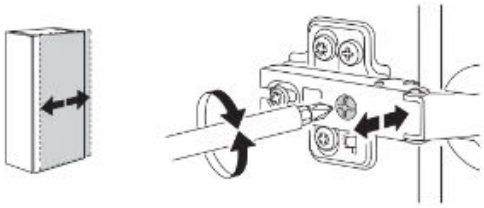

G	x32
	
M3.5*12mm	

ASSEMBLY INSTRUCTION

DESCRIPTION

1003OAK

Byron Large Sideboard

The Door Mounting -Concealed Hinges are Three-way Adjustable

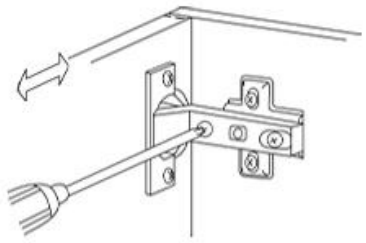

Horizontal

By screw adjustment

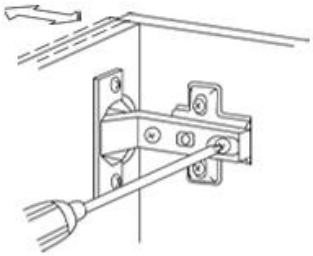

In-and-Out

By loosening the hinge-arm mounting screw
or via cam adjustment

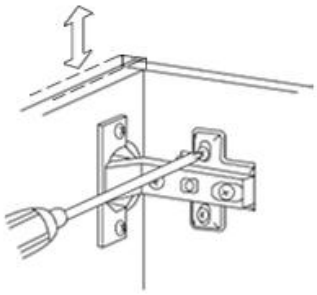

Vertical

Via slots in the mounting plate or
via cam adjustment

ASSEMBLY INSTRUCTION

DESCRIPTION

1003OAK
Byron Large Sideboard

STEP 17

Different wall materials require different types of fixing devices. Use fixing devices suitable for the walls in your home, sold separately. Please seek professional advice if you are in doubt of what fixing should
be use..

This tipping restraint is not an earthquake restraint. If you wish to add the extra security of earthquake restraints, they must be purchased and installed separately.

WARNING, PLEASE READ TO Reduce the risk to toppling furniture

- NEVER open more than one drawer at the time.
- NEVER allow children to stand, climb or hang on furniture. It may topple and cause serious injury or death.
- Do not place toys or other child appealing items on top of this furniture.
- ALWAYS anchor this product to a wall or other suitable surface. check anchors regularly.
- Place heavy items in lower drawers
- Use of anti toppling restraints may only reduce, but will not eliminate the risk to tip over.
- NEVER put a TV on this product.
  For more information please visit www.productsafety.gov.au

Screw and wall plugs are not provided, please use appropriate fixtures for your wall.

TIPPING RESTRAINTS KIT INSTALLATION GUIDANCE

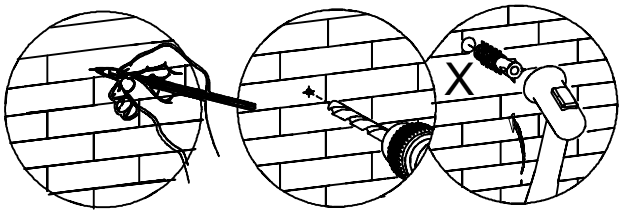

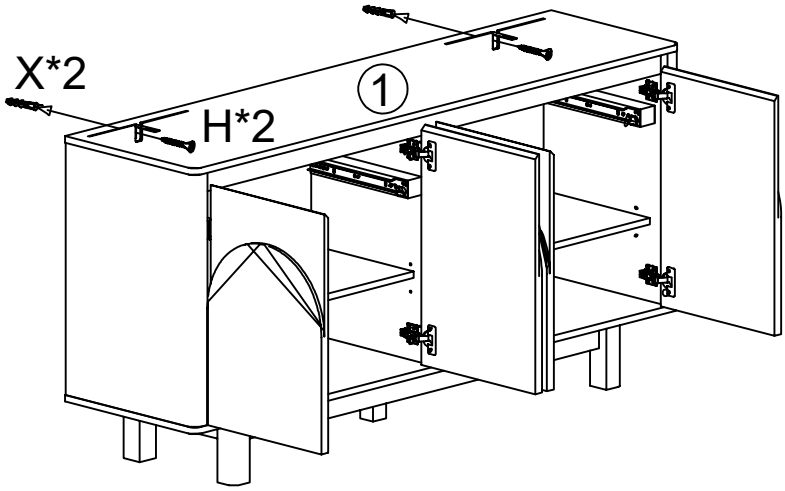



H	x2	X	x2
M4*35mm			

ASSEMBLY INSTRUCTION

DESCRIPTION

1003OAK

Byron Large Sideboard

STEP18

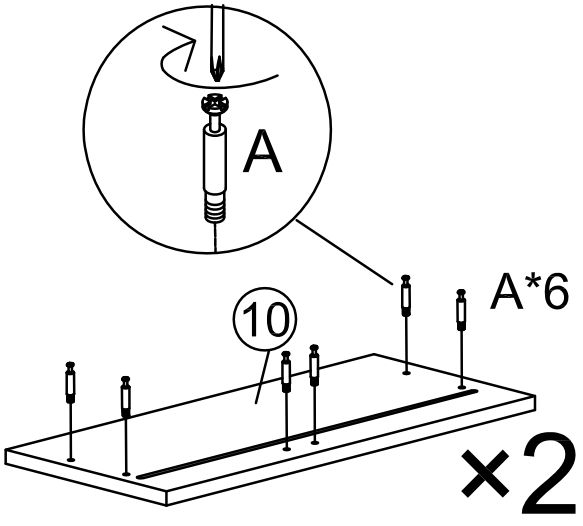

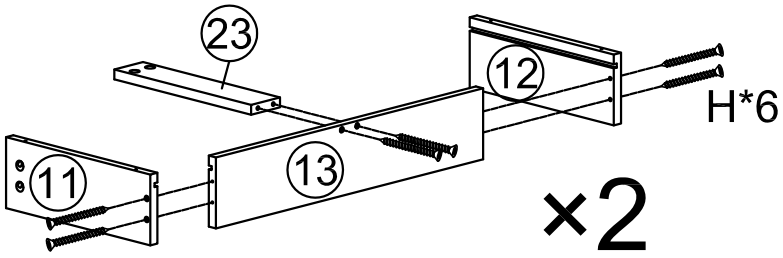

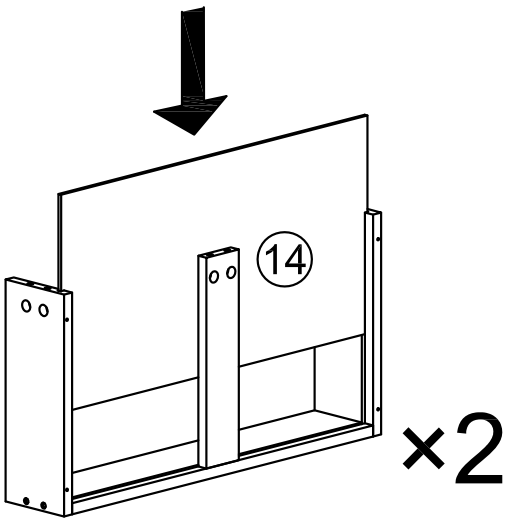

A	x12	H	x12
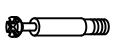			
M6x35mm		M4*35mm	

ASSEMBLY INSTRUCTION

DESCRIPTION

1003OAK

Byron Large Sideboard

STEP19

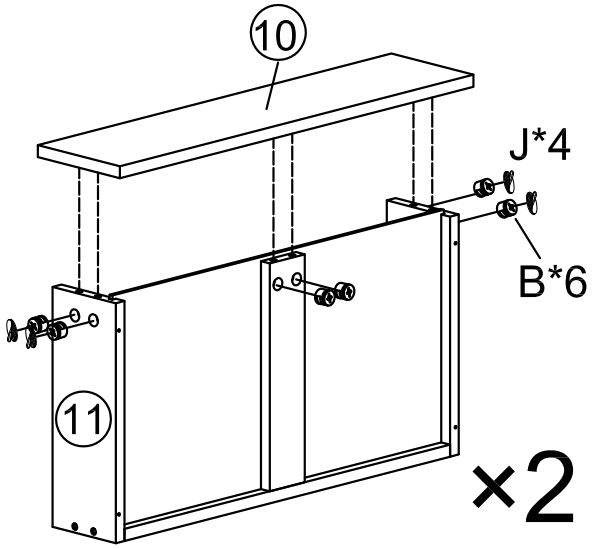

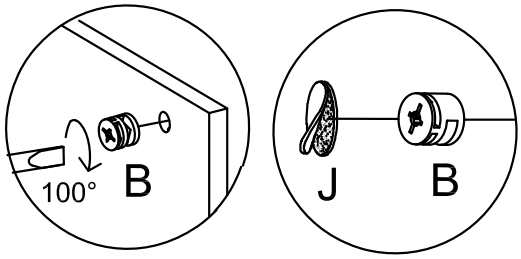

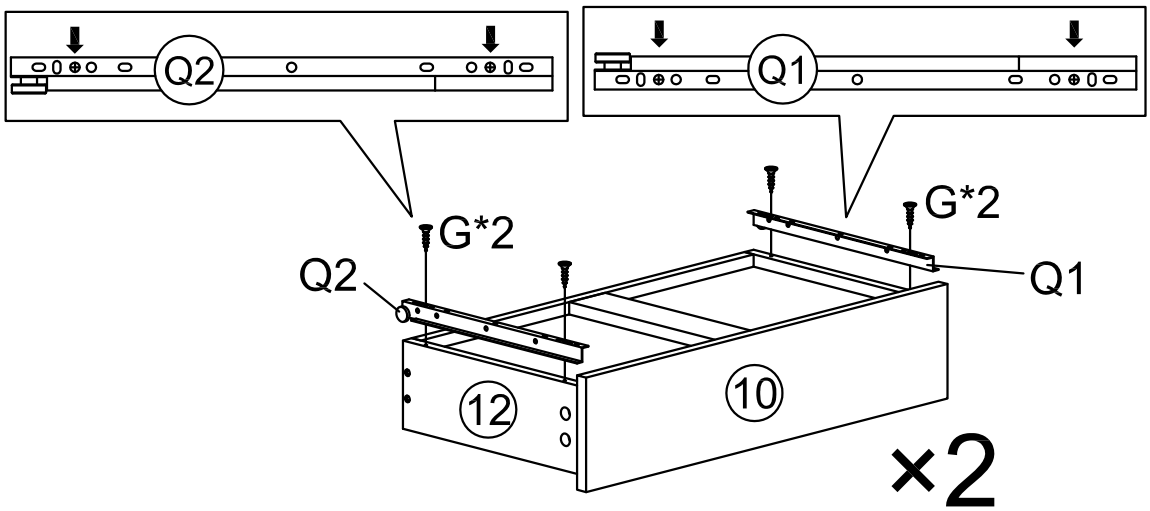

B	x12	G	x8	J	x8	Q1	x2	Q2	x2
								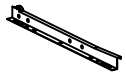	
Φ15mm		M3.5*12mm		ϕ20		300mm		300mm	

ASSEMBLY INSTRUCTION

DESCRIPTION

1003OAK

Byron Large Sideboard

STEP20

