ASSEMBLY INSTRUCTION

DESCRIPTION

1106R1

CLIFTON SIDEBOARD

1.5 hr

APPROXIMATE ASSEMBLY TIME

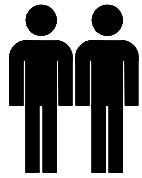

2 PERSON ASSEMBLY

FLOORAREA
2MX1.6M

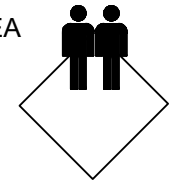

REQUIRED ASSEMBLY SOACE

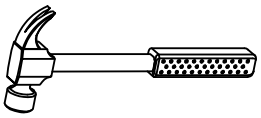

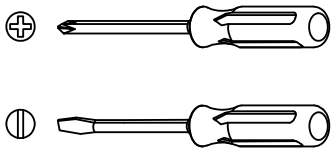

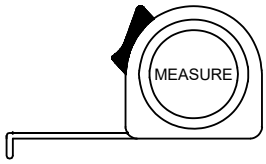

REQUIRED ASSEMBLY TOOLS

ASSEMBLED DIMENSIONS

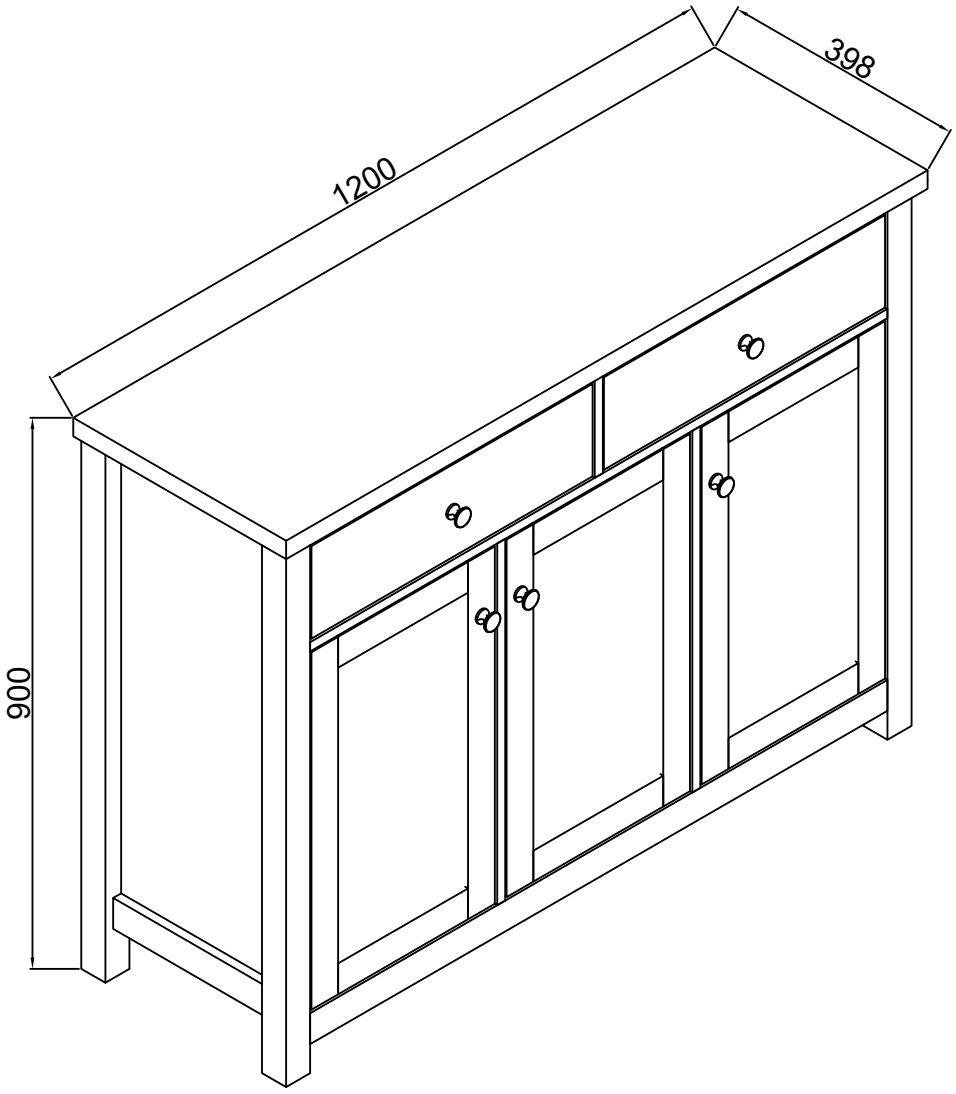

ASSEMBLY INSTRUCTION

DESCRIPTION

1106R1

CLIFTON SIDEBOARD

WARNING : ENSURE THE WALL STRAP IS ATTACHED TO AVOID SERIOUS INJURY OR DEATH.

To avoid any serious or fatal injury, a wall strap has been provided with this product to prevent toppling. Always secure this product with an anchor device to the wall or suitable surface. Wall fixing hardware are not included since different surface materials require different attachments. Please seek professional advice if you are in doubt of what fixing device to use.

Your product has been provided with a permanent safety label that should never be removed for safety reasons.



For more information please visit www.productsafety.gov.au

ASSEMBLY INSTRUCTION

DESCRIPTION

1106R1

CLIFTON SIDEBOARD

PARTS LIST

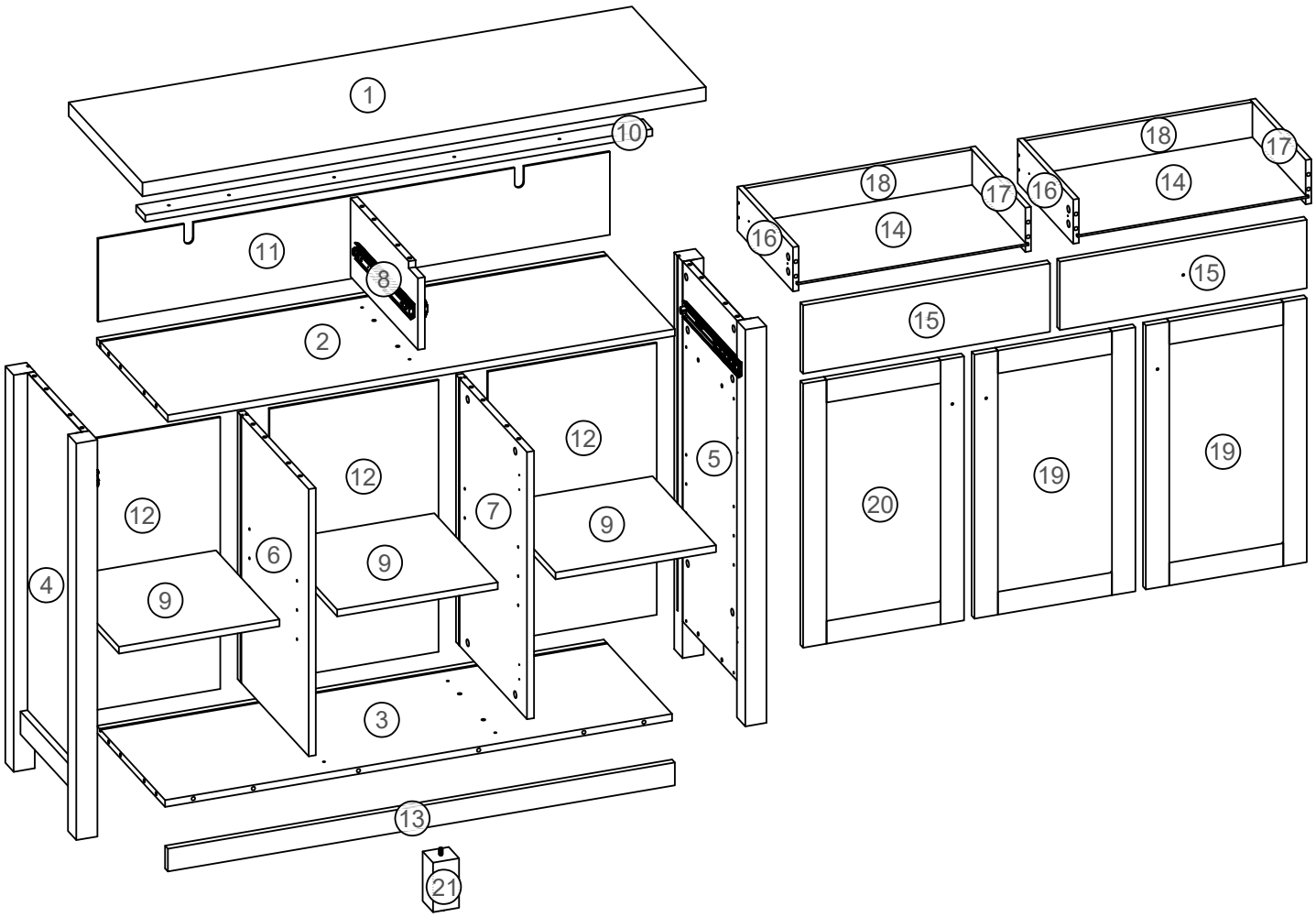

NO.	PARTS LIST	QTY
(1)	Part1	1
(2)	Part2	1
(3)	Part3	1
(4)	Part4	1
(5)	Part5	1
(6)	Part6	1
(7)	Part7	1
(8)	Part8	1
(9)	Part9	3
(10)	Part10	1
(11)	Part11	1

NO.	PARTS LIST	QTY
(12)	Part12	3
(13)	Part13	1
(14)	Part14	2
(15)	Part15	2
(16)	Part16	2
(17)	Part17	2
(18)	Part18	2
(19)	Part19	2
(20)	Part20	1
(21)	Part21	1

ASSEMBLY INSTRUCTION

DESCRIPTION

1106R1

CLIFTON SIDEBOARD

HARDWARE LIST

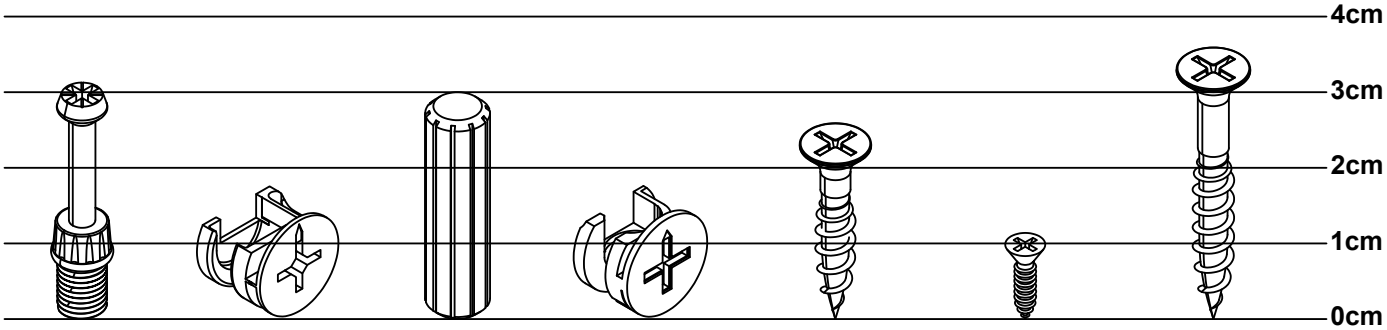

36X
M7.5m/m
A
CAM-BOLT

28X
Dia:15x11.5m/m
B
CAM-LOCK

26X
Dia:8x30m/m
C
WOOD DOWEL

8X
Dia:15x9.5m/m
D
CAM-LOCK

6X
Dia:3.5x28m/m
E
WOOD SCREW

12X
Dia:3x12m/m
F
WOOD SCREW

8X
Dia:3.5x35m/m
G
WOOD SCREW

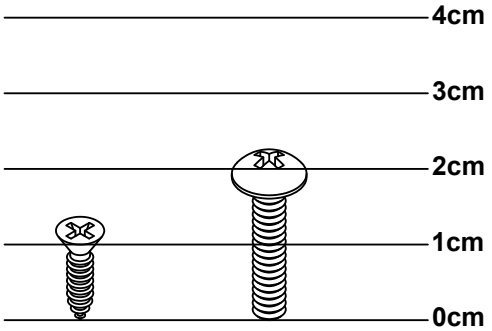

42X
Dia:3.5x14m/m
Q
WOOD SCREW

5X
Dia:4x22m/m
R
HANDLE SCREW

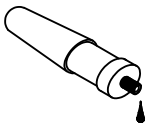

1X
H
GLUE



2X
I

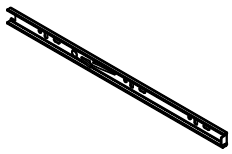

4X
Dia:12"
J

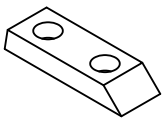

3X
K

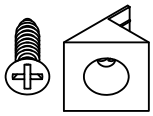

20X
L
BACK PLY STOPPER

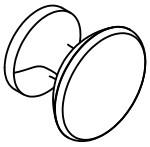

5X
M
HANDLE

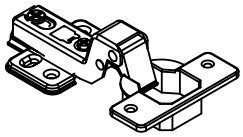

6X
Dia Ø35m/m
N
HINGE

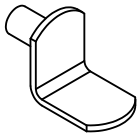

12X
O

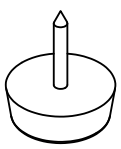

4X
P
LEG STUD

ASSEMBLY INSTRUCTION

DESCRIPTION

1106R1

CLIFTON SIDEBOARD

Top Tips before you start!

1. Please check that all parts are present before you start the assembly of your furniture, as once assembled, the furniture is exempt from our home approval policy.

2. For ease and speed of assembly, we recommend that before you commence each step of the assembly, that you identify all the parts required for that step.

3. For larger items,please ensure that you have sufficient space and people(as indicated on page 1) to assemble your product safely.

4. We recommend that.where possible,all items are assembled near to the area in which they will be placed in use, to avoid moving the product unnecessarily once assembled.

5. For the protection of your fumiture,partirularly items of high gloss finish, we recommend that the product is placed on a protected surface during assembly to prevent any damage.

6. During assembly please take care not to over-tighten any fittings,as this may damage the product.

Care and Maintenance of your Furniture

- Please periodically check all fittings and re-tighten as necessary.
- Please do not drag or pull your furniture.
- Wipe occasionally with a soft cloth slightly dampened with water.Then buff with a dry clean soft cloth.
- Never allow any kind of liquid to remain on your furniture.Absorption can cause wood to warp or finishes to de-laminate.
- Please do not sit or stand on this item.

ASSEMBLY INSTRUCTION

DESCRIPTION

1106R1

CLIFTON SIDEBOARD

Drawer Installation Guide

Before you insert the drawers into the frame, please ensure that the ball bearing sliders (on the assembled unit) have been placed to the front of the main unit. If the bearings are in the middle of the slider it will be difficult to install the drawers correctly.

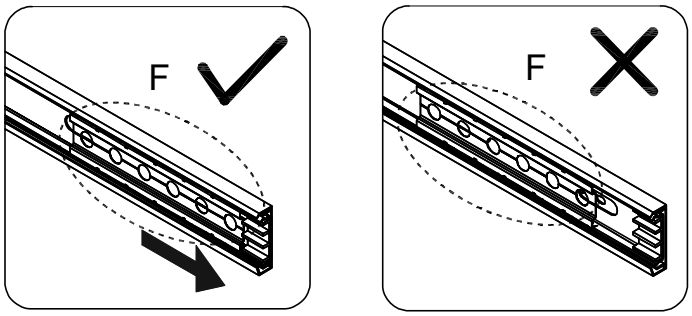

Insert the drawer into the assembled frame as show below. Keep each side of the drawer straight and aligned correctly to the sliders on the assembled frame.

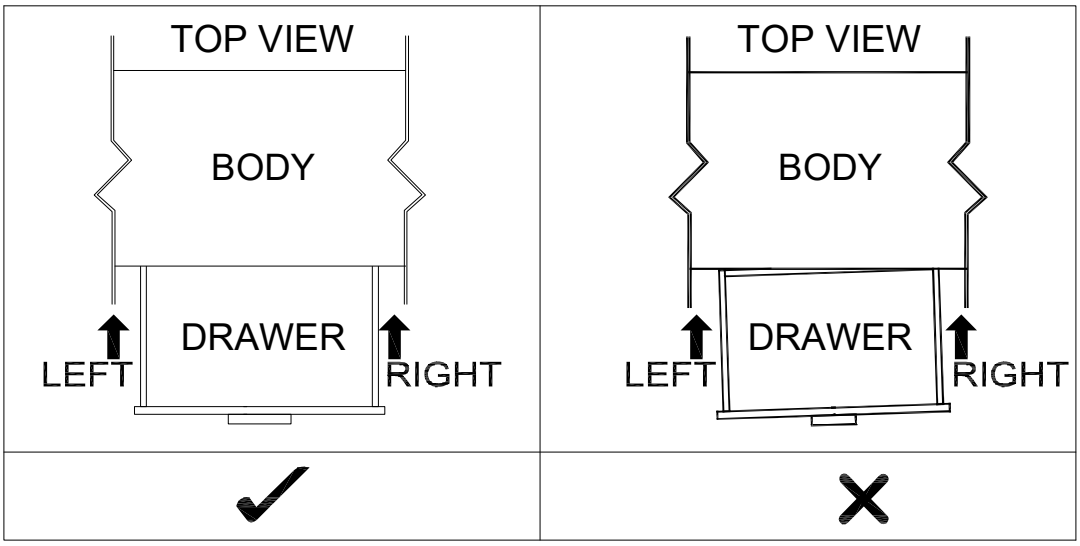

Gently start to push the drawer into position, the drawer sliders should start to connect with the sliders on the assembled frame. Once connected apply even pressure to each side and gently push the drawer into place.

The ball bearings should catch the drawer sliders, once they do you may find that you need to apply more pressure, this is perfectly normal as long as you are keeping the drawers straight, push the drawers 100% of the way in. Finally slide drawer in and out a few times to ensure the ball bearings are running smoothly in the slider. Installation is complete.

At any stage throughout the install process you feel like the drawers are not evenly sliding into the assembled frame, please remove the drawers before they start to attach to the bearing slider and start the install steps again.

ASSEMBLY INSTRUCTION

DESCRIPTION

1106R1

CLIFTON SIDEBOARD

SPECIAL TIPS FOR FITTING CAM-LOCKS AND CAM-BOLTS

CAM-LOCK

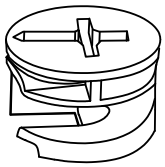

WHEN FITTING CAMS

ENSURE STARTING POSmON 15 CORRECT BEFORE YOU INSERT CONNECTING CAM-BOLTS TURN CLOCKWISE UNTIL SECURE

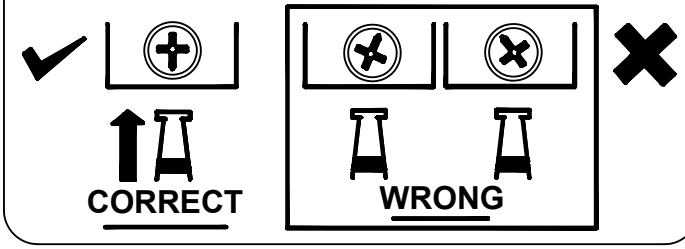

Align with long point of cross

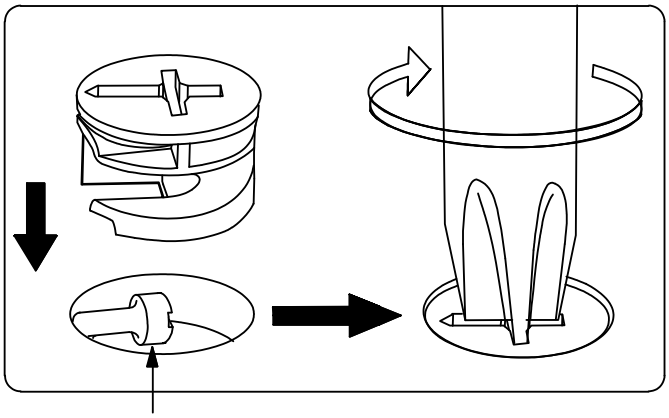

Lock head needs to be in centre

CAM-BOLT

Tighten until shoulder is flush with panel.Do not overtighten or undertighten (see example below)

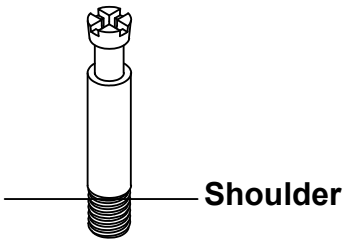

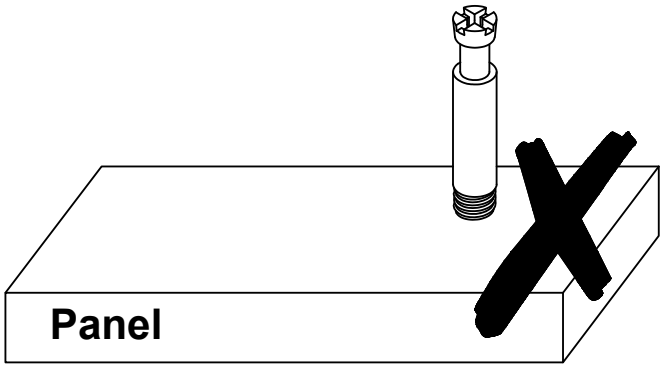

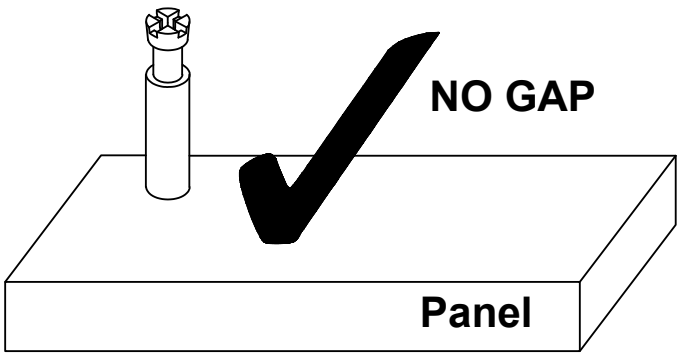

ASSEMBLY INSTRUCTION

DESCRIPTION

1106R1

CLIFTON SIDEBOARD

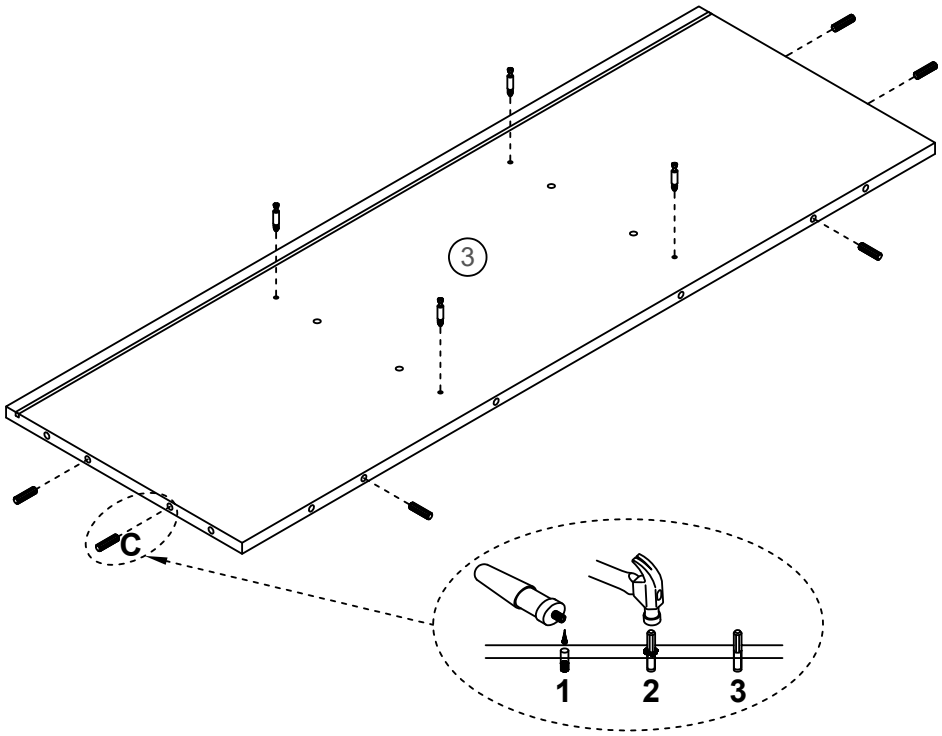

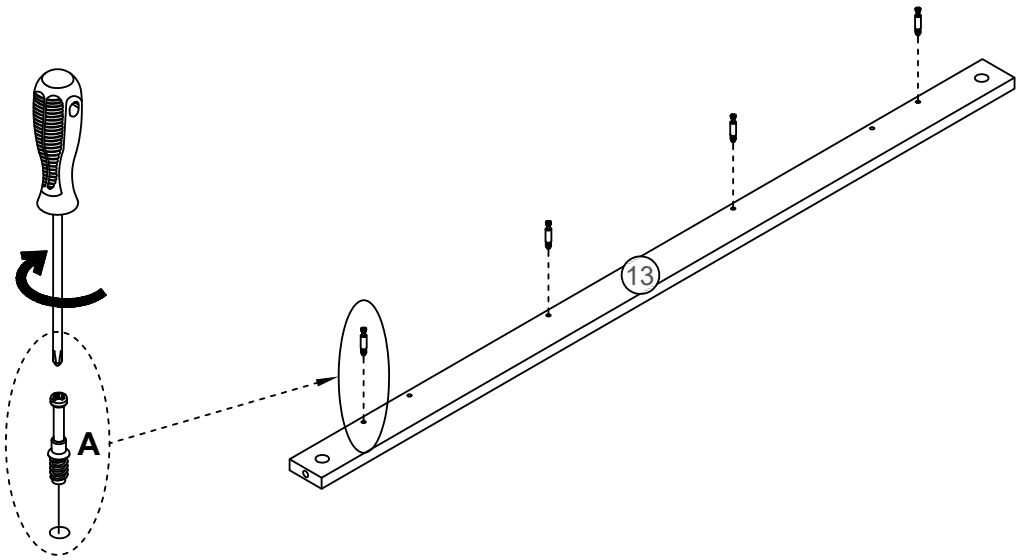

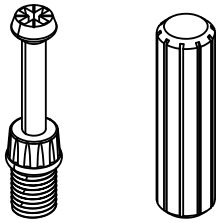

8X
A

6X
C

ASSEMBLY INSTRUCTION

DESCRIPTION

1106R1

CLIFTON SIDEBOARD

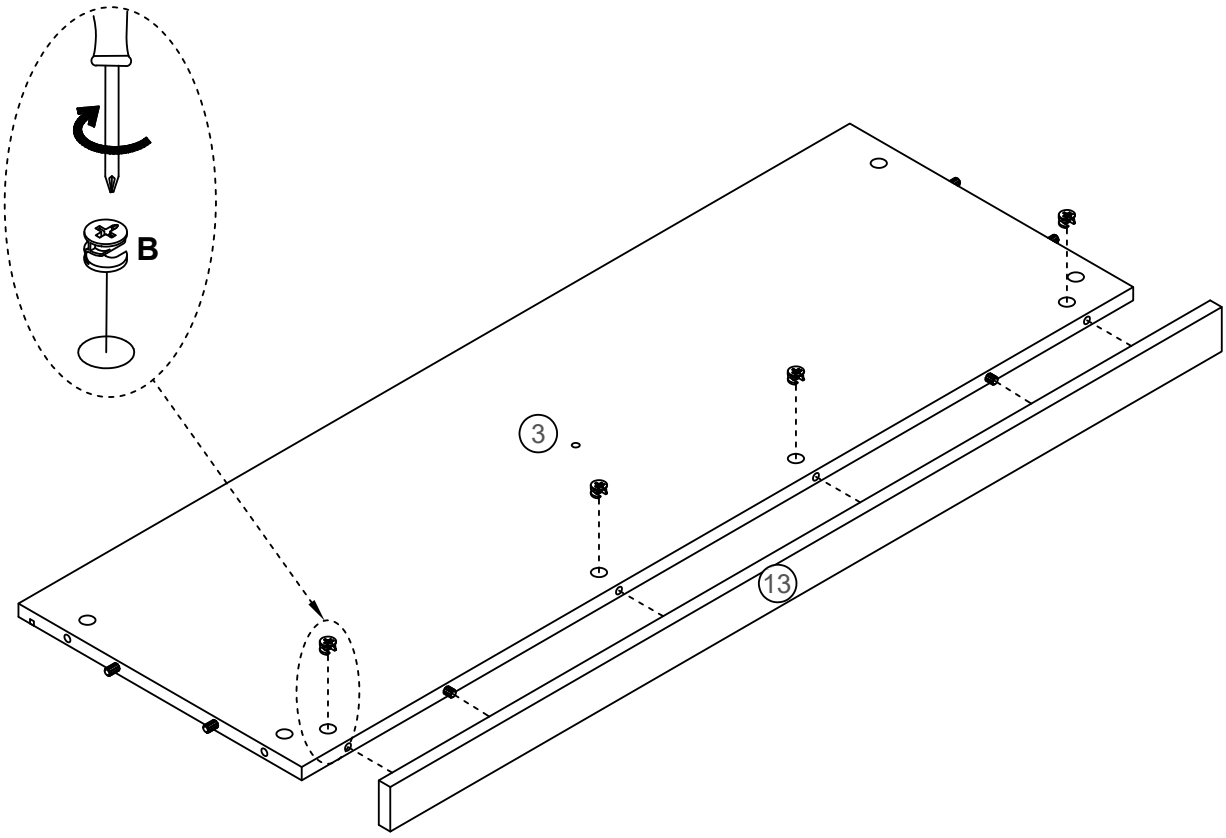

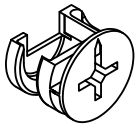

4X
B

ASSEMBLY INSTRUCTION

DESCRIPTION

1106R1

CLIFTON SIDEBOARD

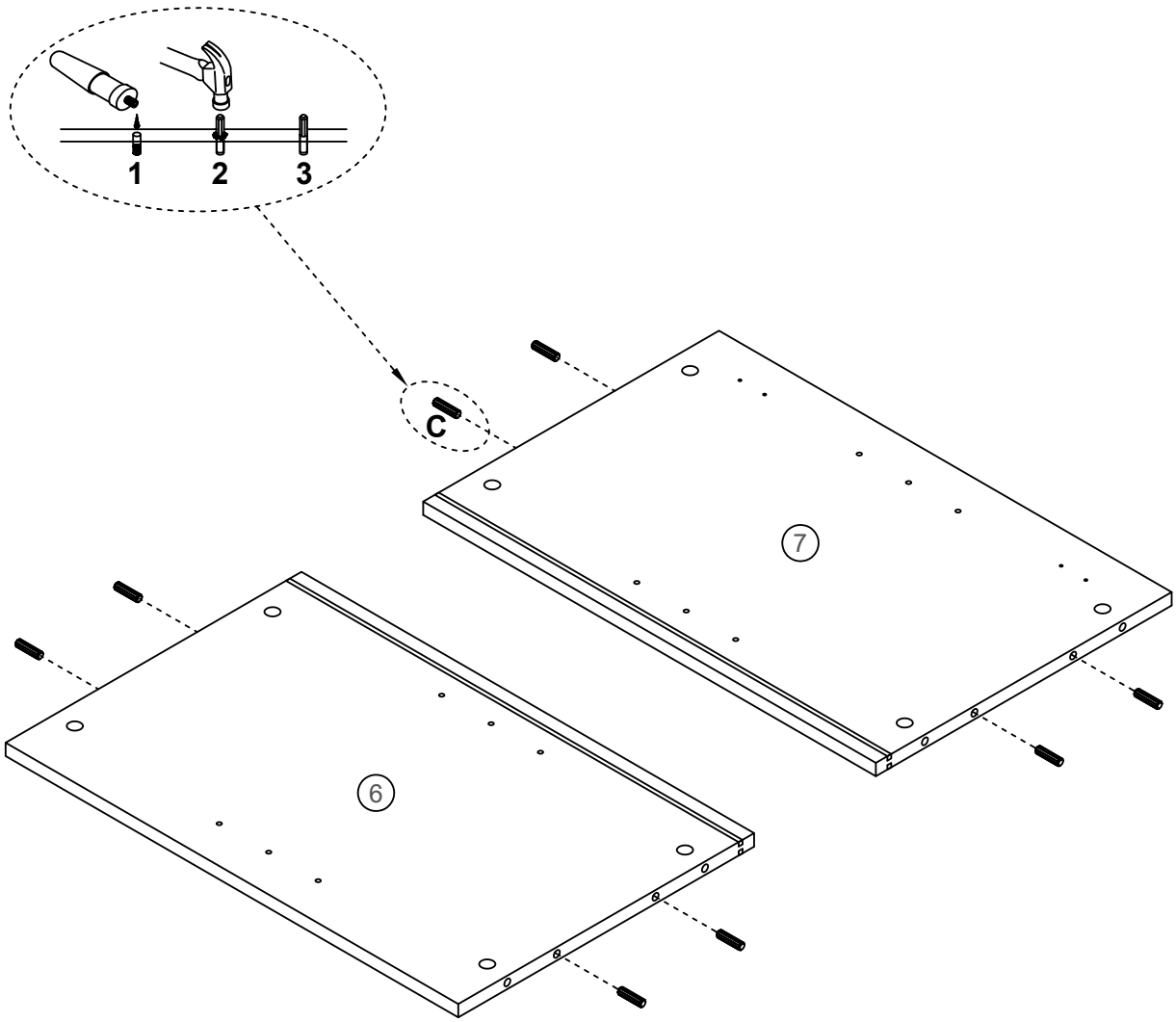

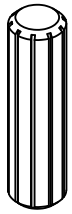

8X
C

ASSEMBLY INSTRUCTION

DESCRIPTION

1106R1

CLIFTON SIDEBOARD

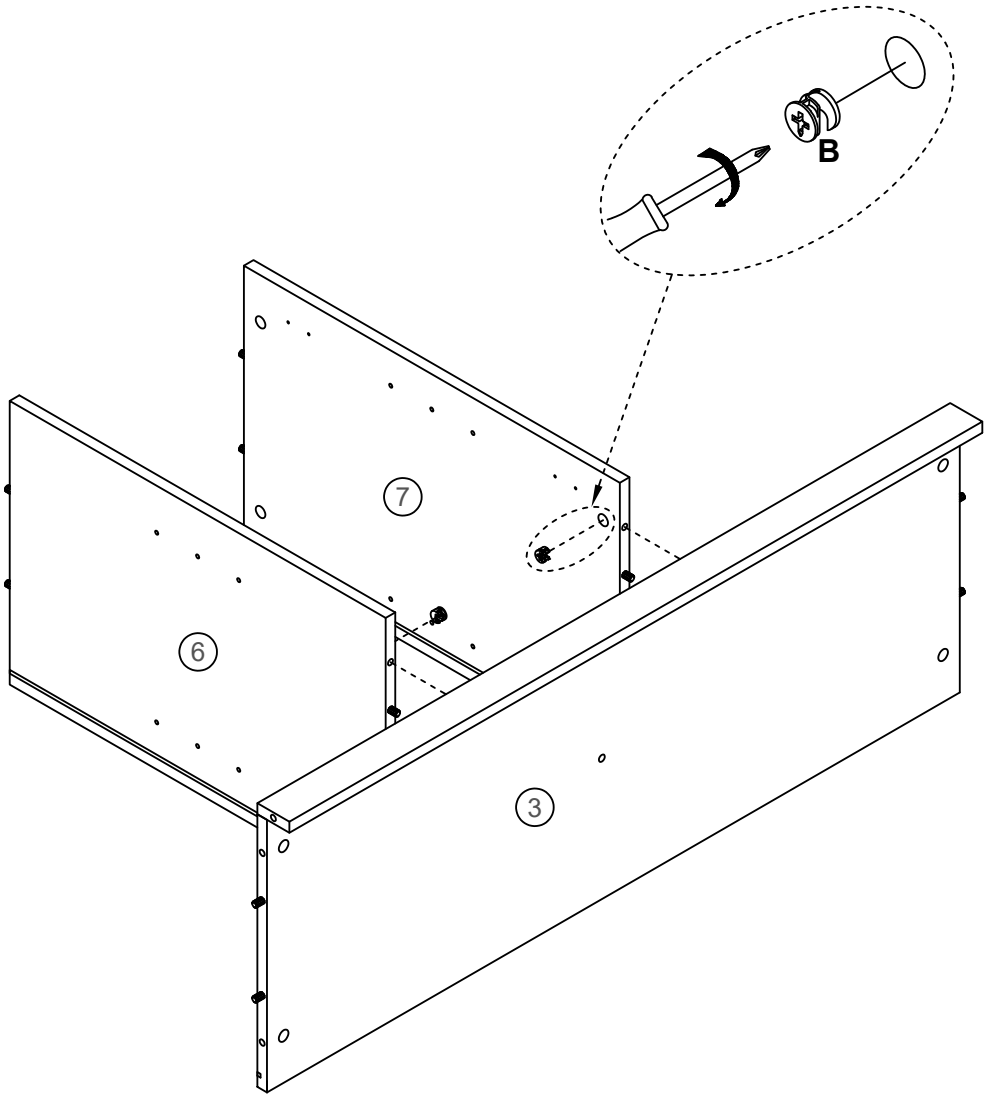

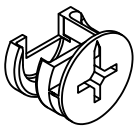

4X
B

ASSEMBLY INSTRUCTION

DESCRIPTION

1106R1

CLIFTON SIDEBOARD

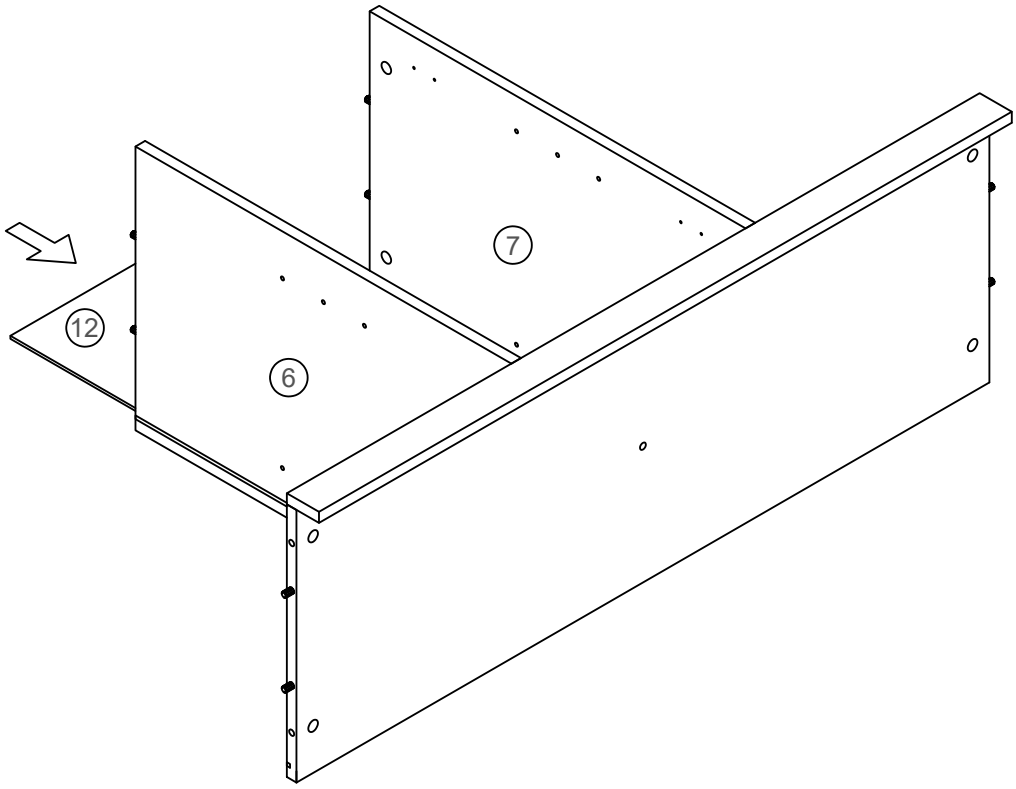

ASSEMBLY INSTRUCTION

DESCRIPTION

1106R1

CLIFTON SIDEBOARD

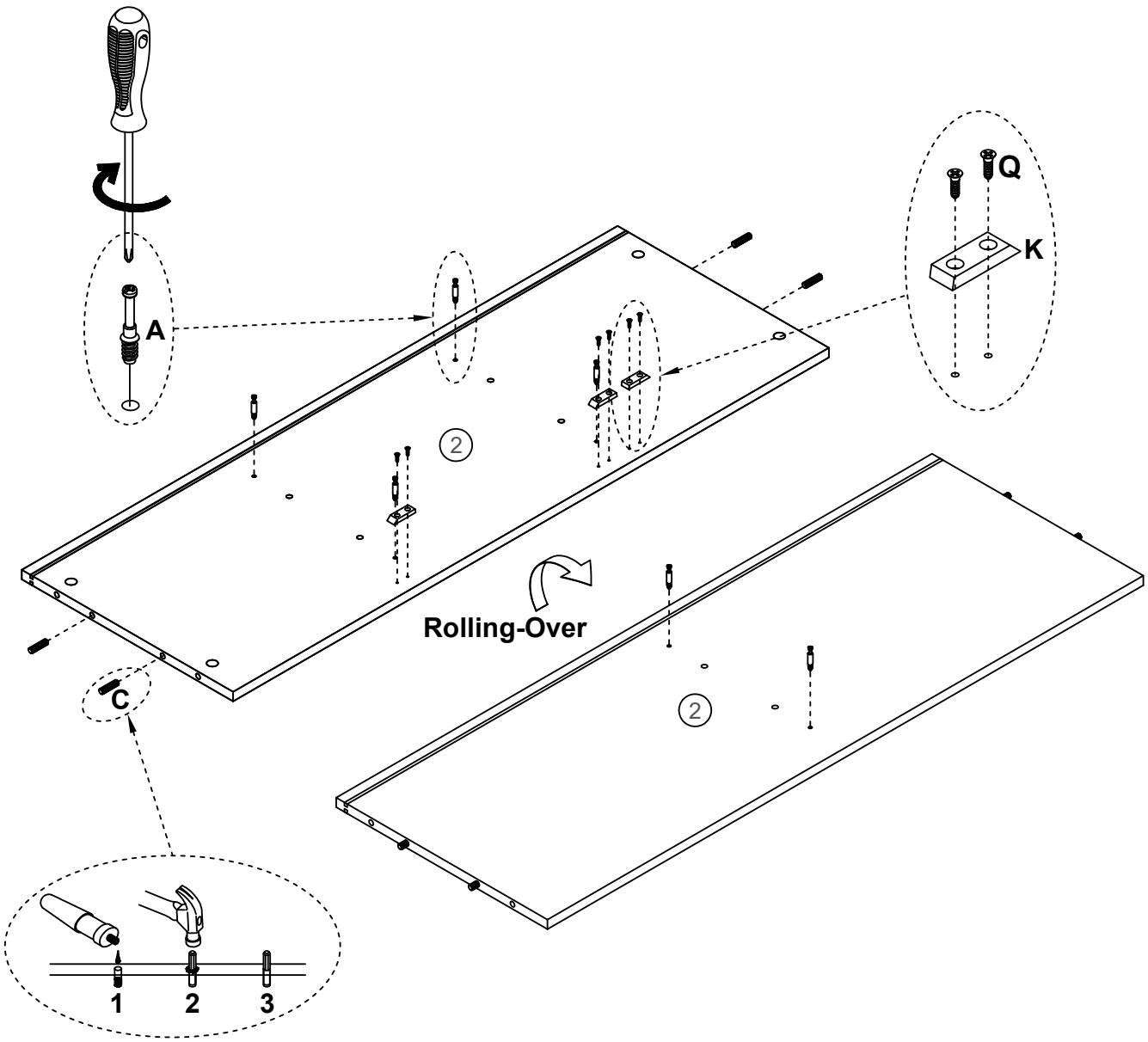

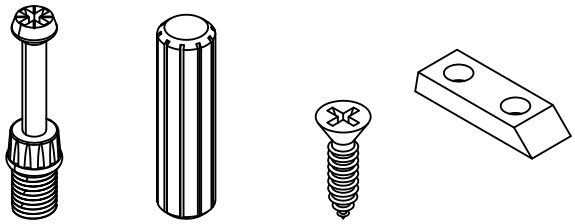

6X A **4X C** **6X Q** **3X K**

ASSEMBLY INSTRUCTION

DESCRIPTION

1106R1

CLIFTON SIDEBOARD

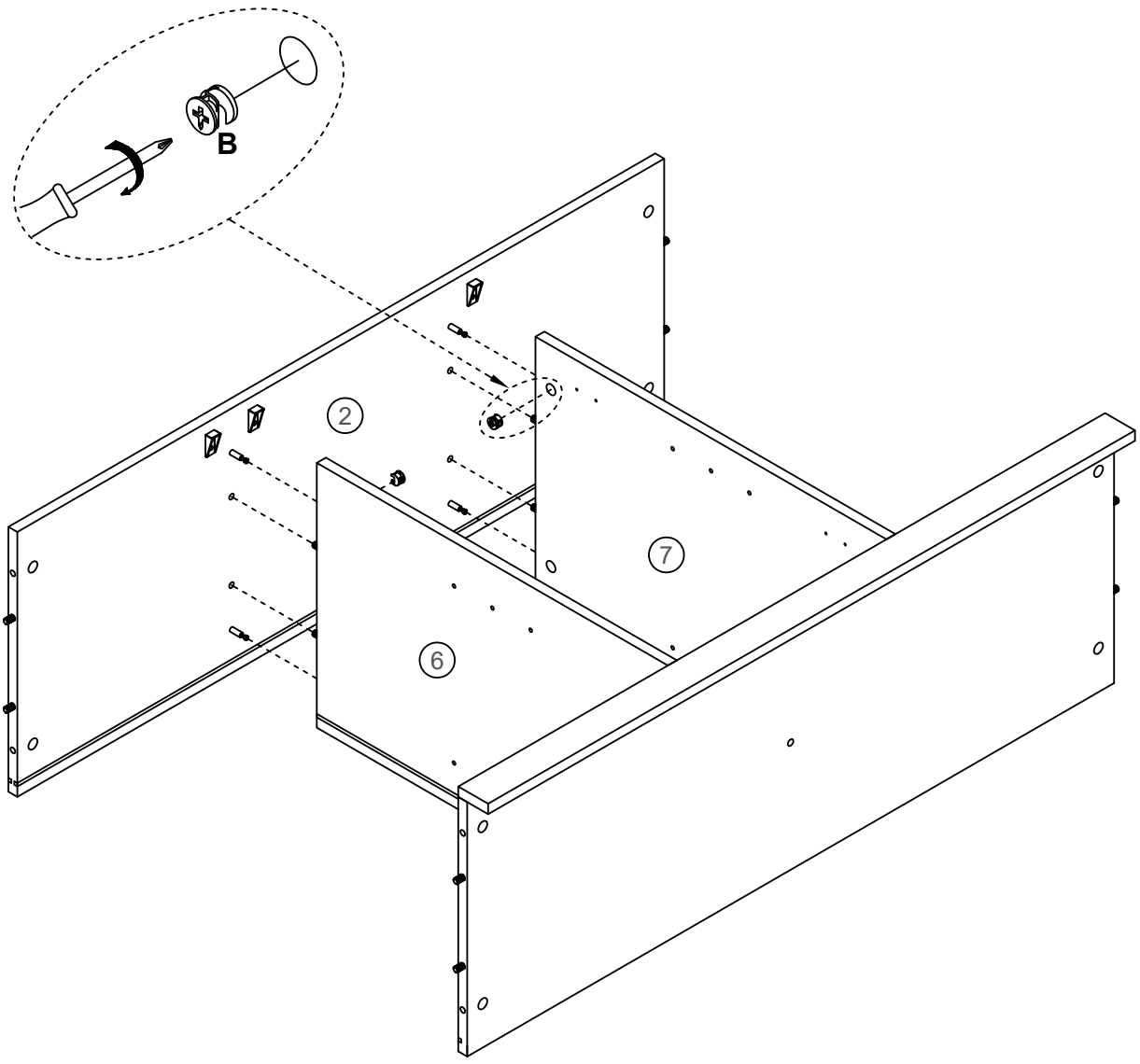

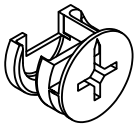

4X
B

ASSEMBLY INSTRUCTION

DESCRIPTION

1106R1

CLIFTON SIDEBOARD

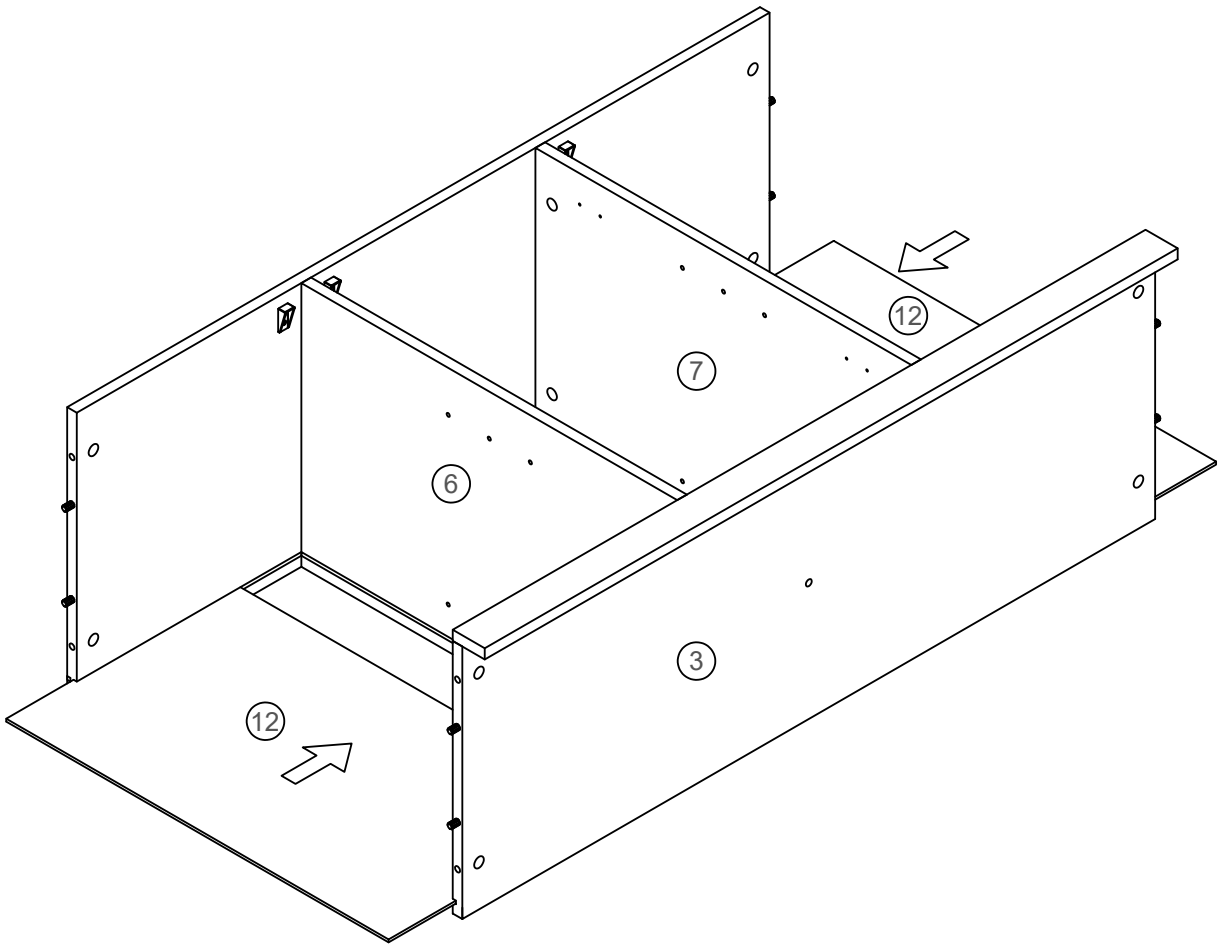

ASSEMBLY INSTRUCTION

DESCRIPTION

1106R1

CLIFTON SIDEBOARD

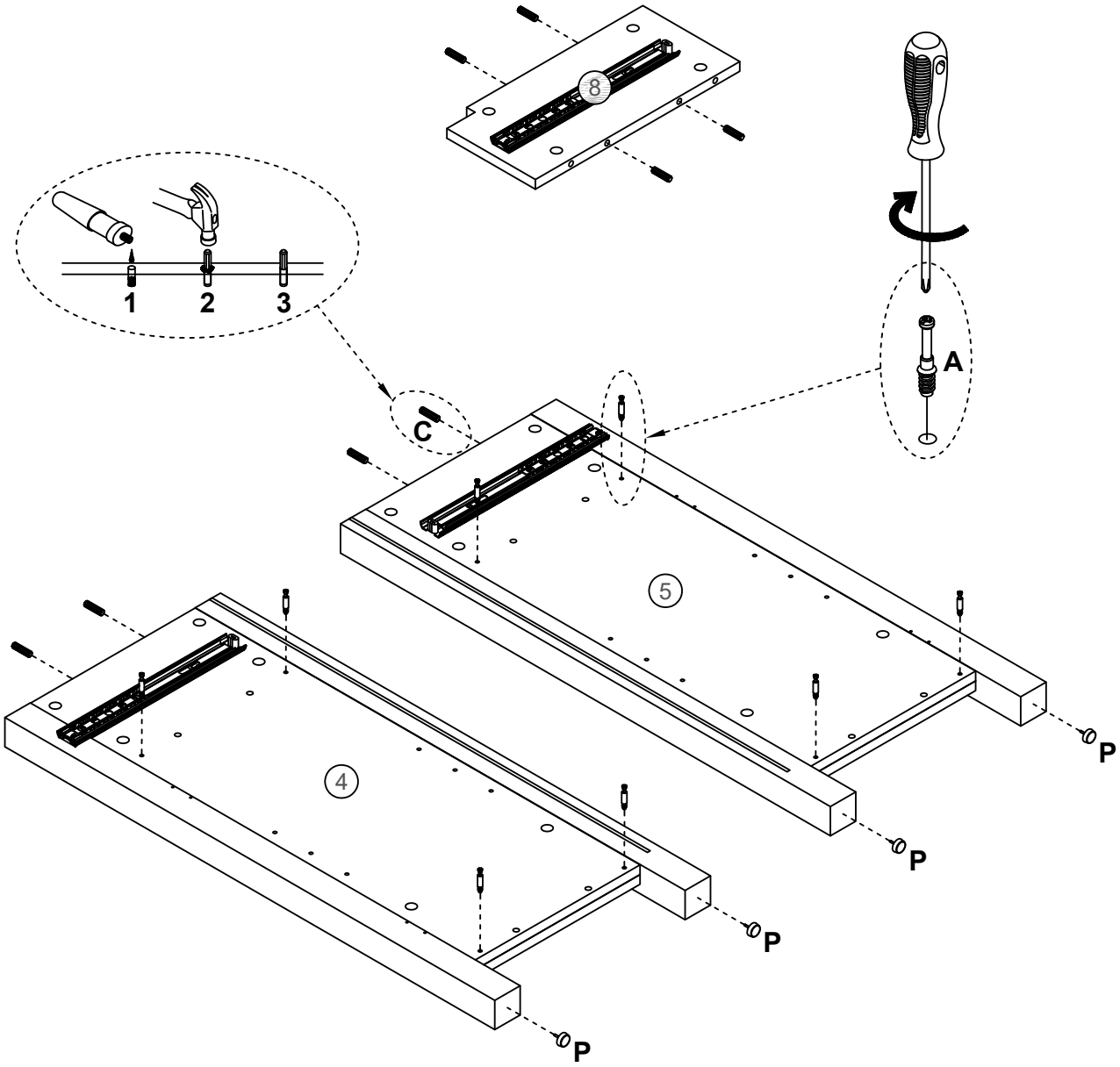

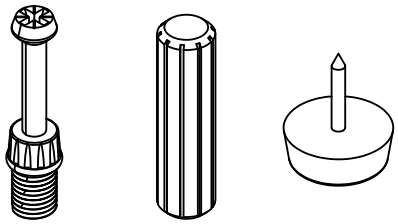

8X
A

8X
C

4X
P

ASSEMBLY INSTRUCTION

DESCRIPTION

1106R1

CLIFTON SIDEBOARD

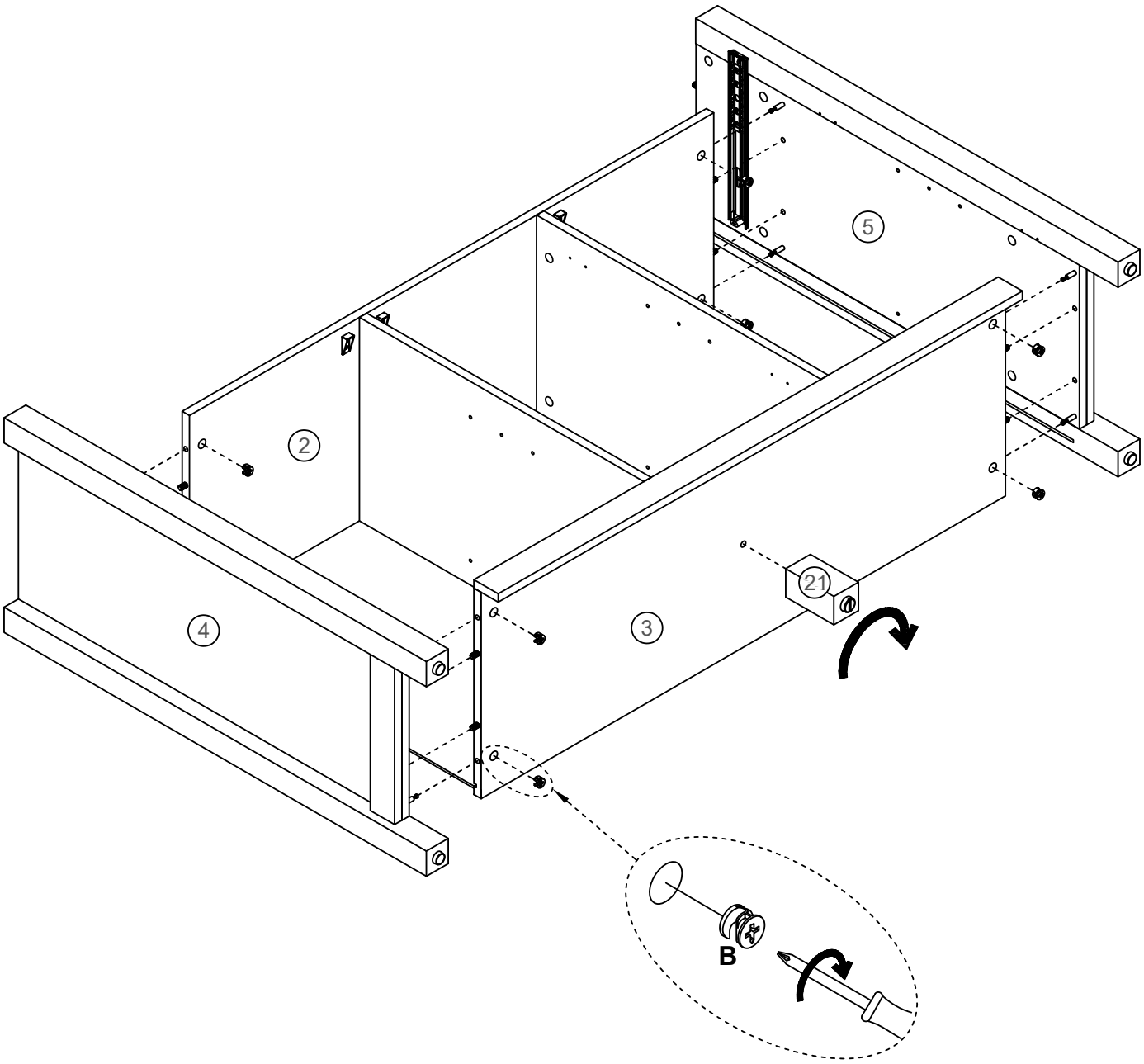

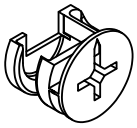

8X
B

ASSEMBLY INSTRUCTION

DESCRIPTION

1106R1

CLIFTON SIDEBOARD

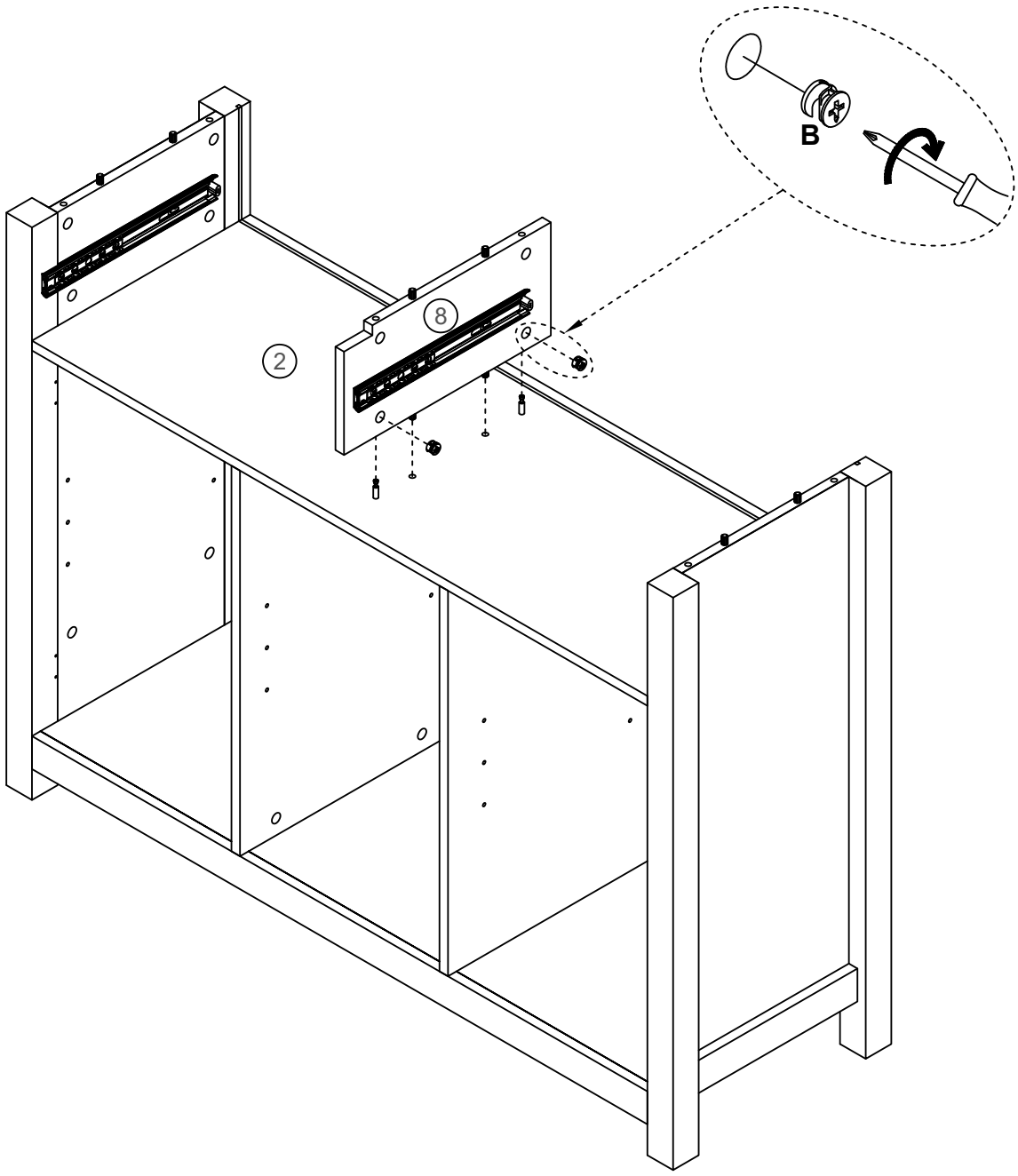

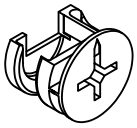

2X
B

ASSEMBLY INSTRUCTION

DESCRIPTION

1106R1

CLIFTON SIDEBOARD

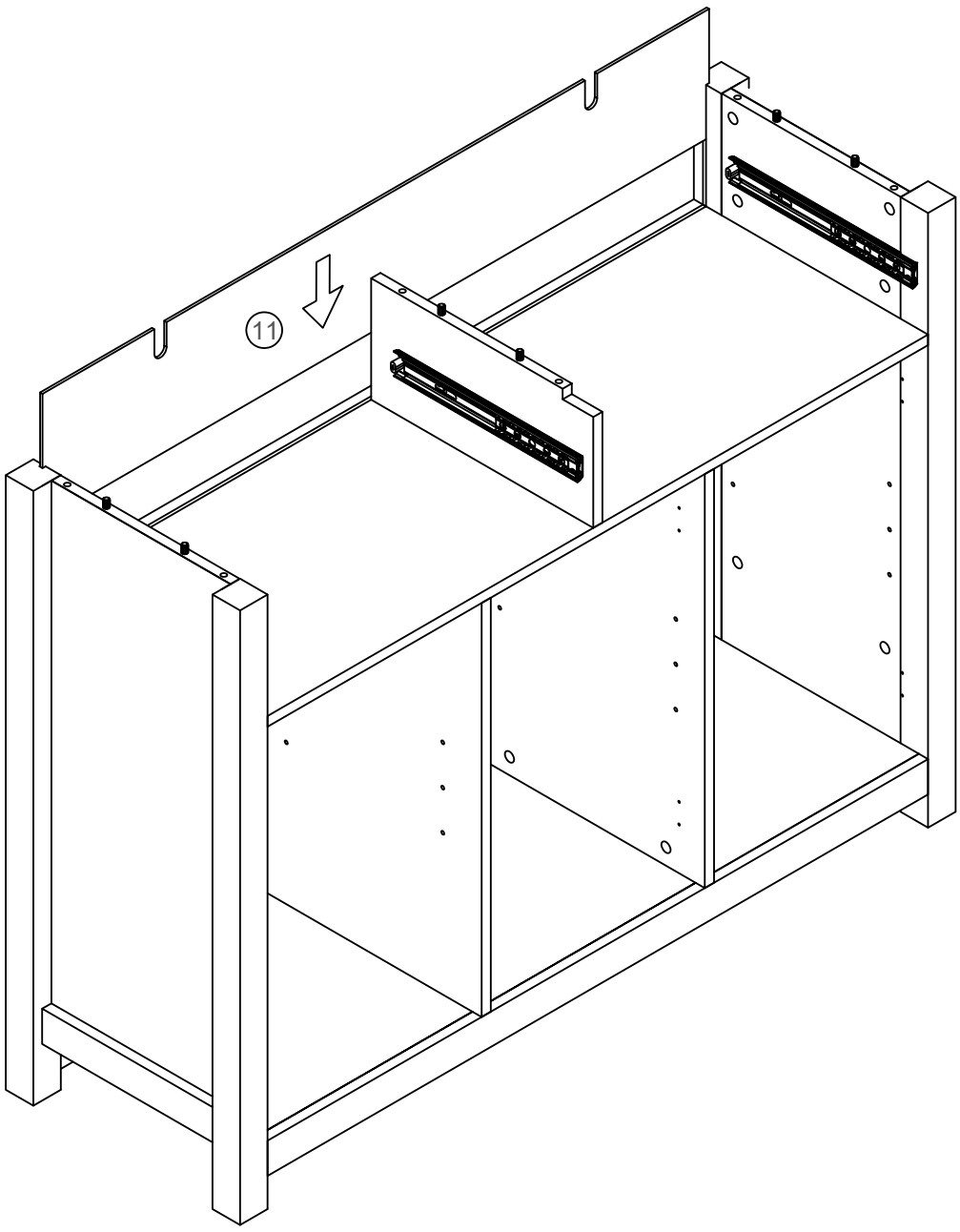

ASSEMBLY INSTRUCTION

DESCRIPTION

1106R1

CLIFTON SIDEBOARD

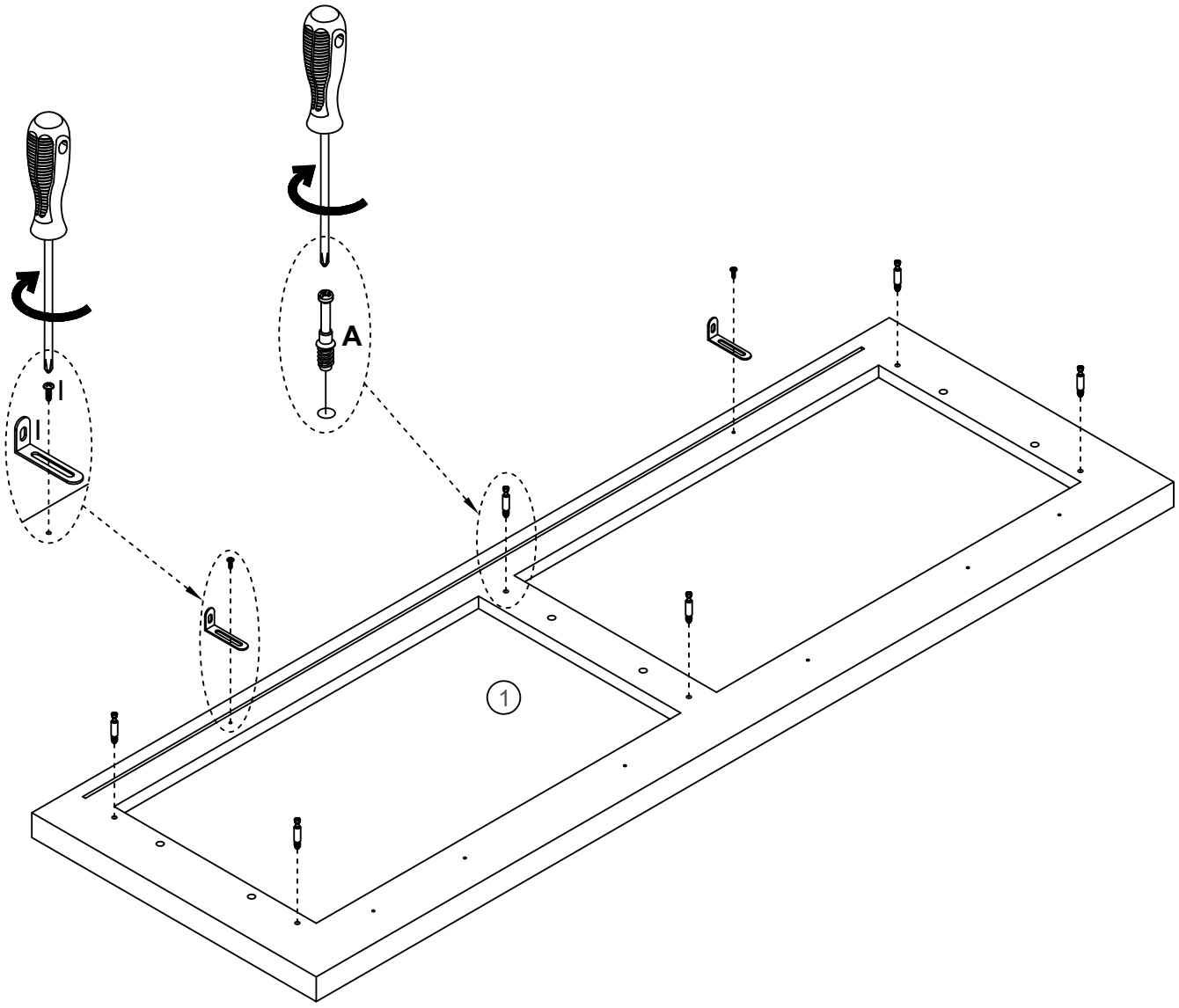

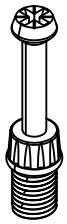

6X
A



2X
I

ASSEMBLY INSTRUCTION

DESCRIPTION

1106R1

CLIFTON SIDEBOARD

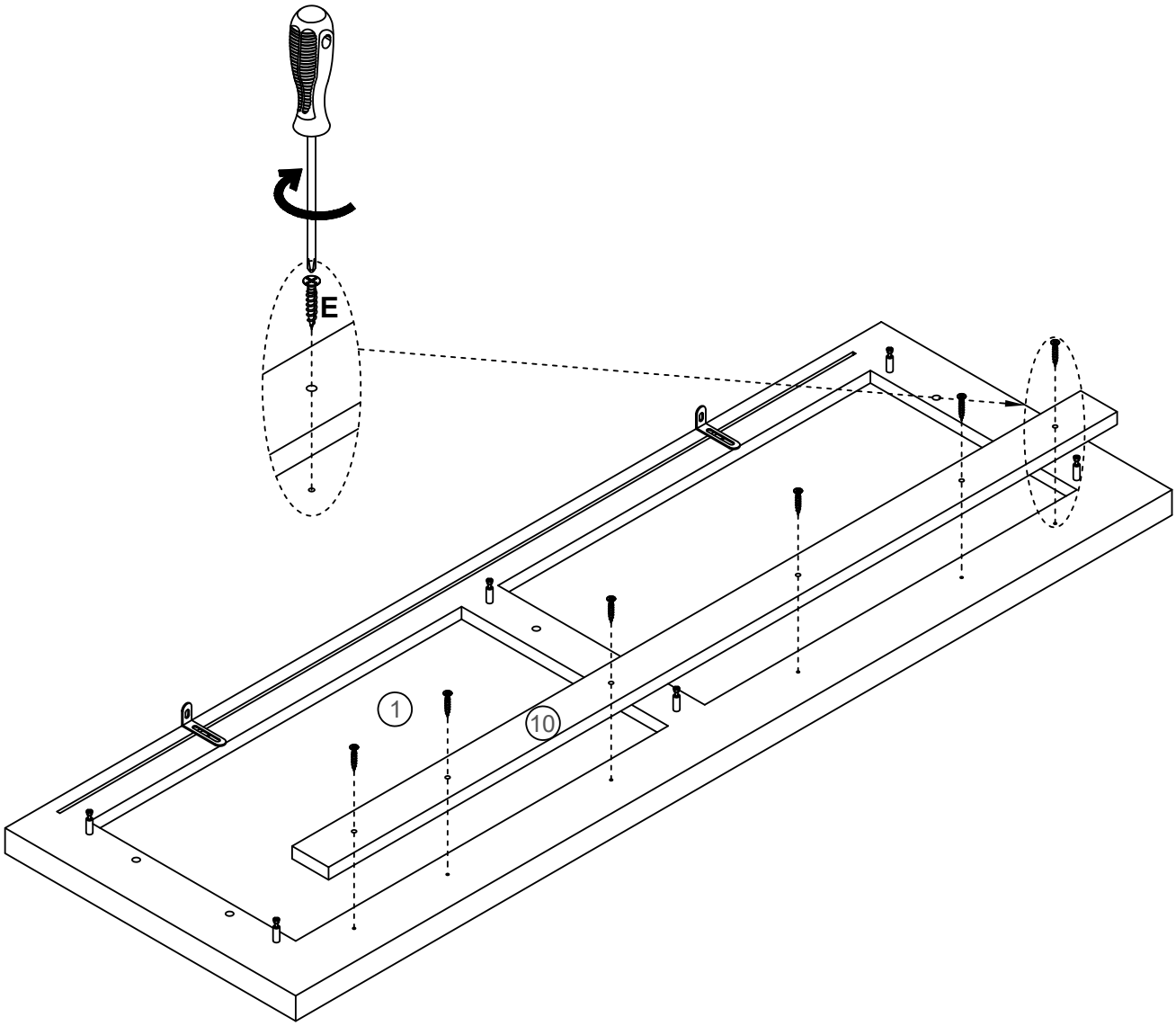

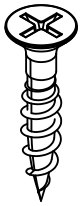

6X
E

ASSEMBLY INSTRUCTION

DESCRIPTION

1106R1

CLIFTON SIDEBOARD

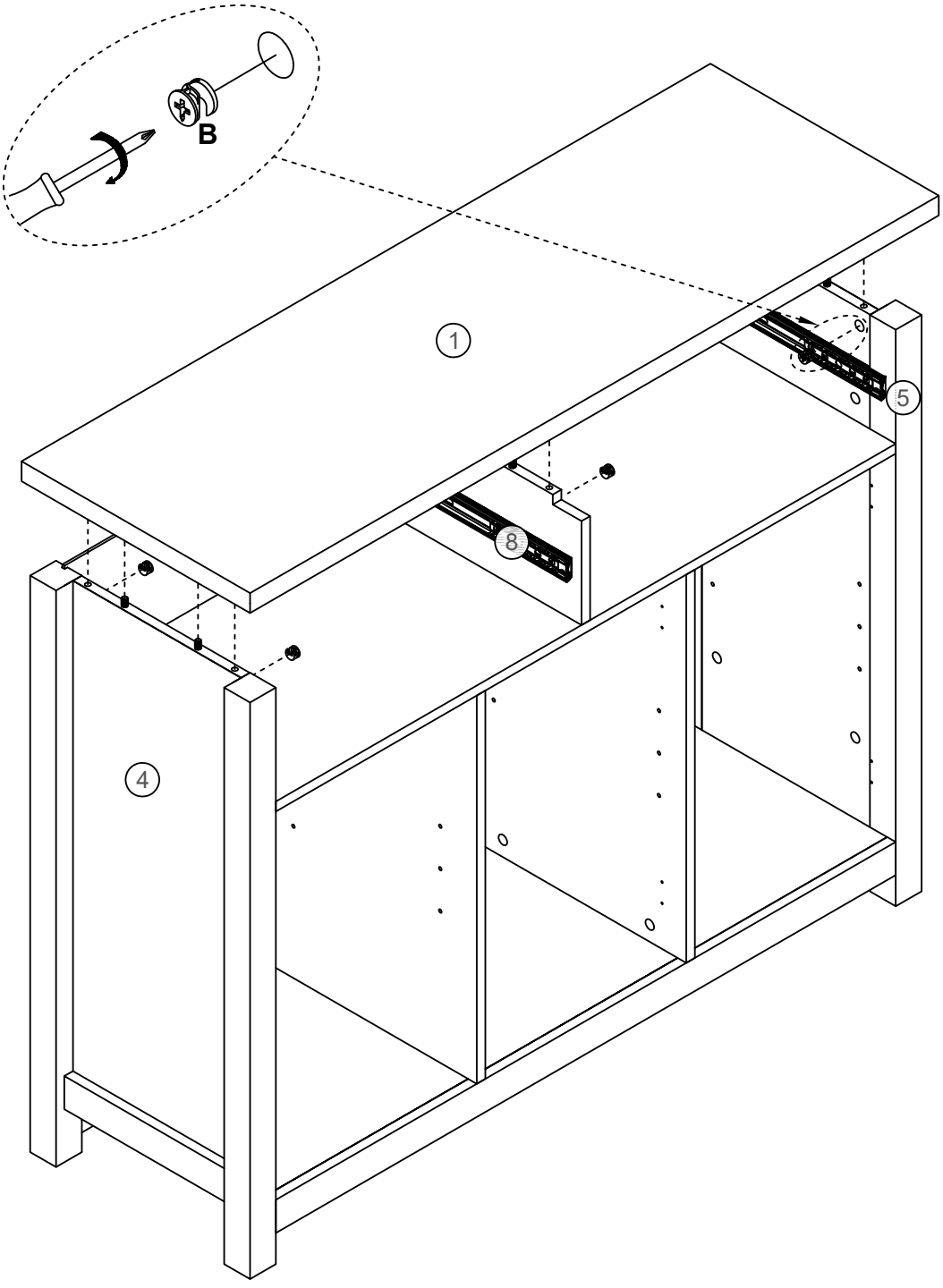

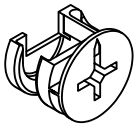

6X
B

ASSEMBLY INSTRUCTION

DESCRIPTION

1106R1

CLIFTON SIDEBOARD

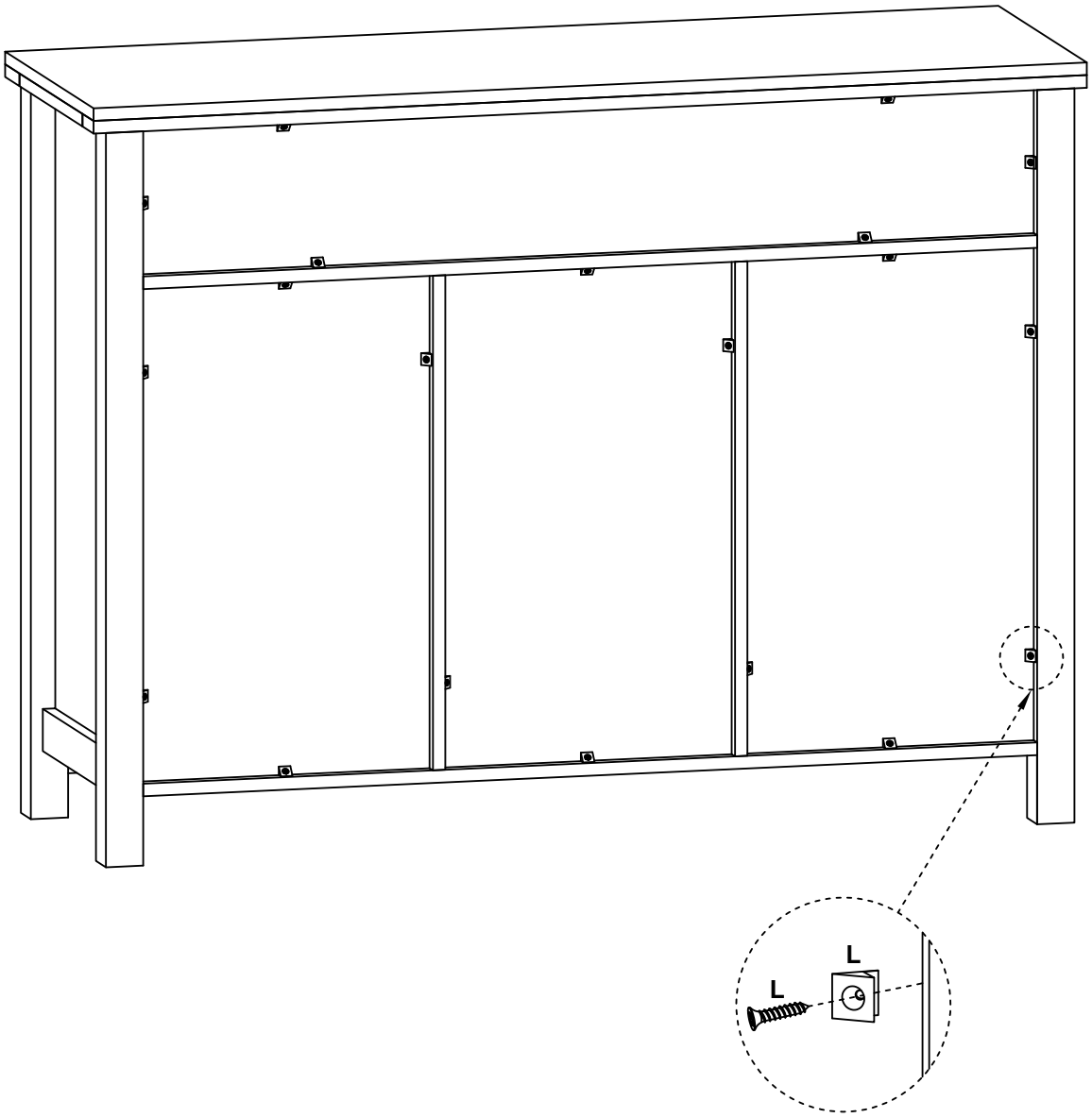

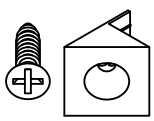

20X
L

ASSEMBLY INSTRUCTION

DESCRIPTION

1106R1

CLIFTON SIDEBOARD

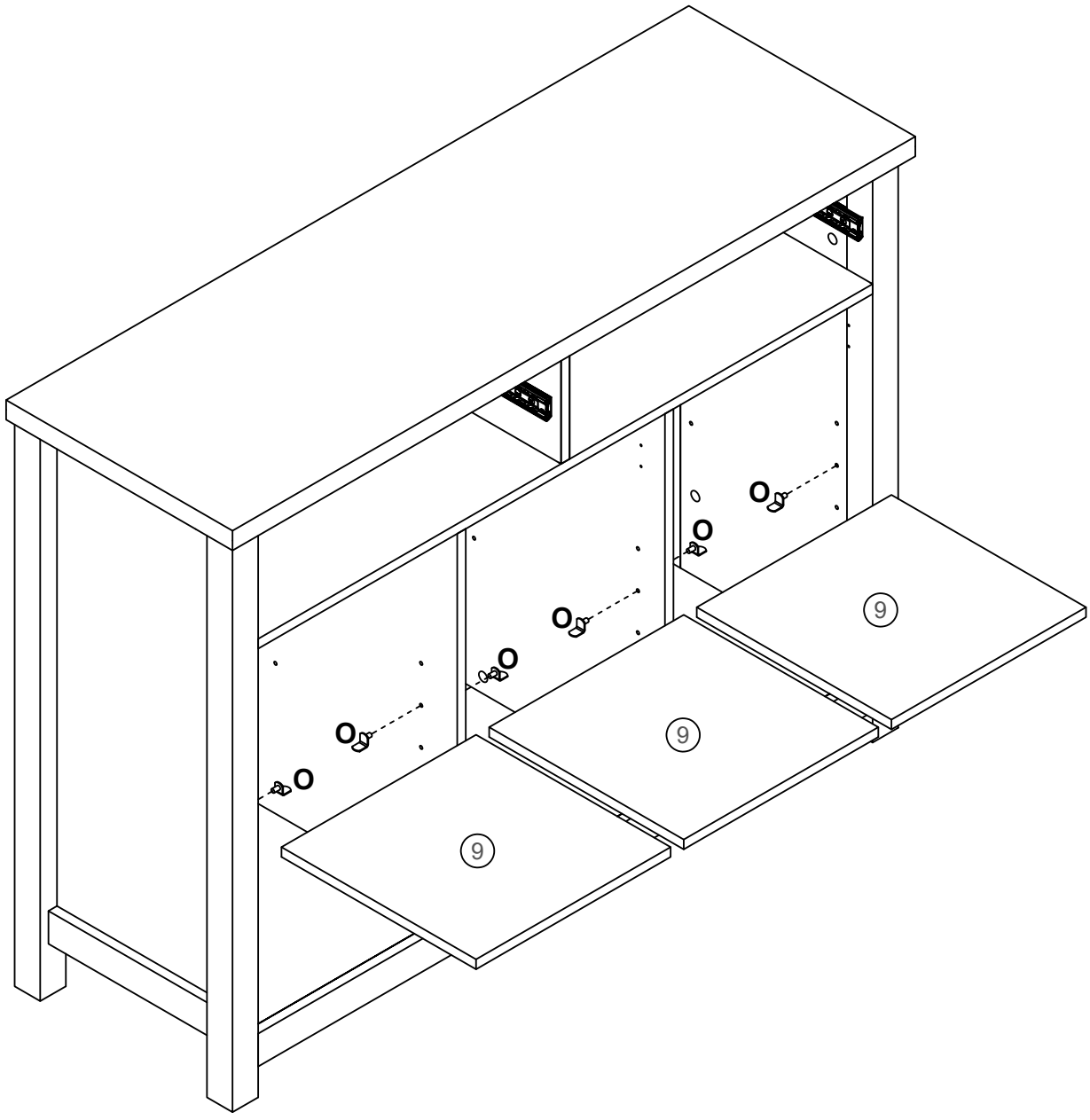

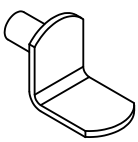

12X
O

ASSEMBLY INSTRUCTION

DESCRIPTION

1106R1

CLIFTON SIDEBOARD

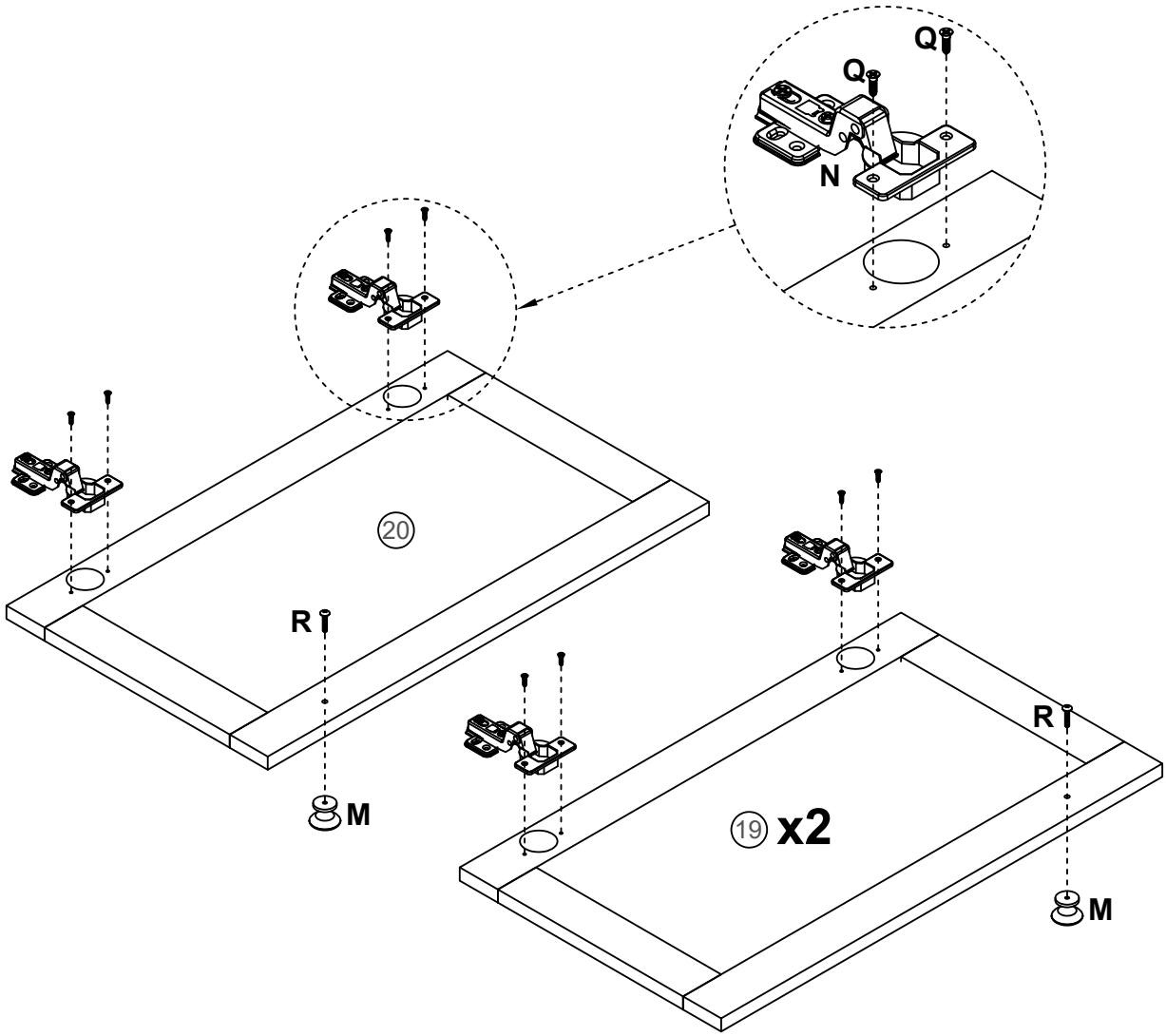

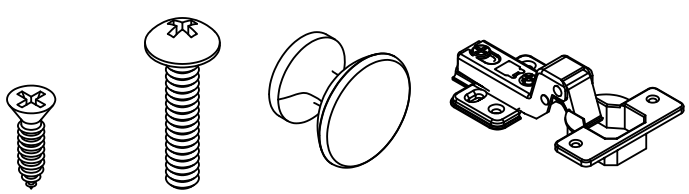

12X
Q

3X
R

3X
M

6X
N

ASSEMBLY INSTRUCTION

DESCRIPTION

1106R1

CLIFTON SIDEBOARD

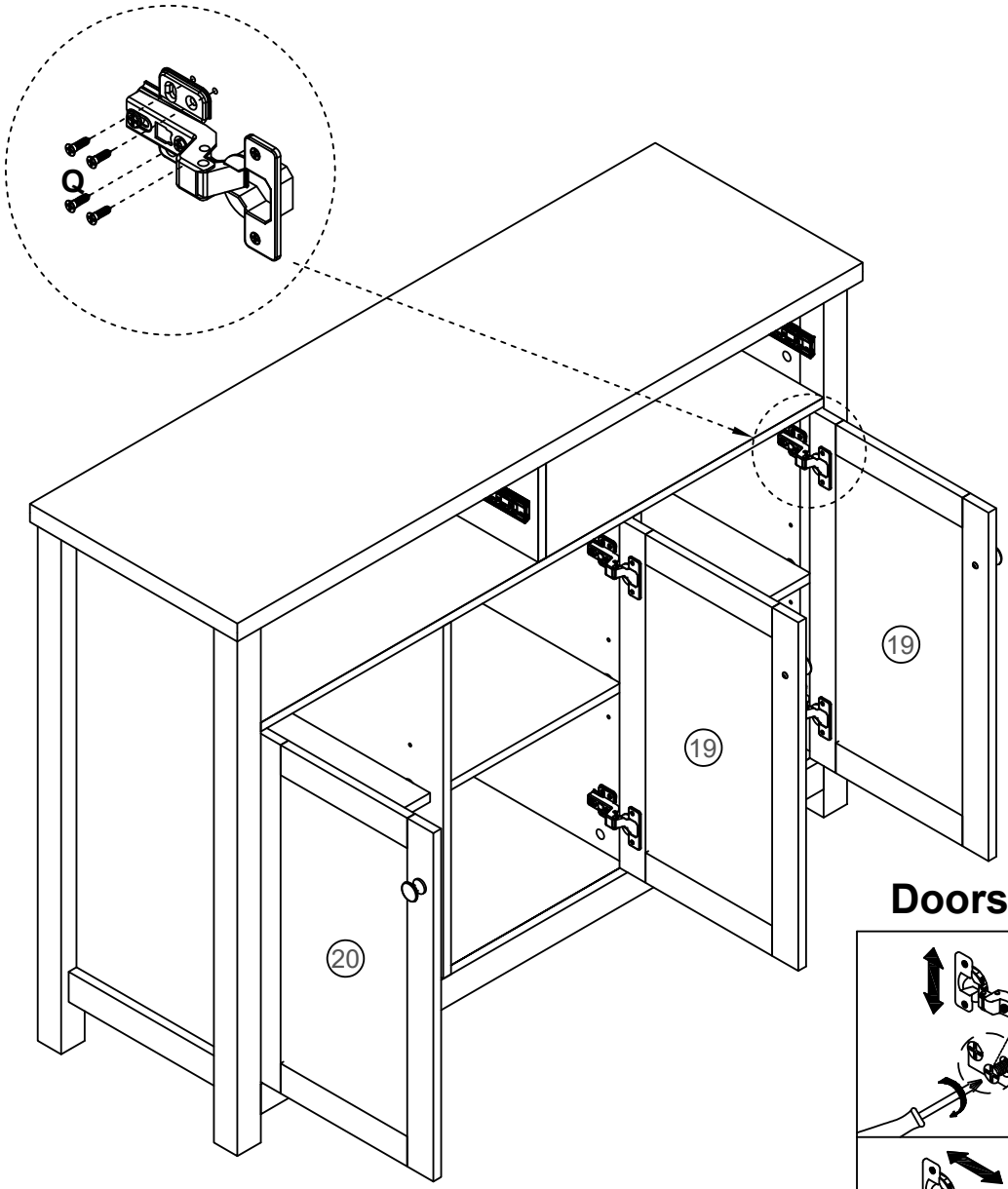

Doors Adjustment

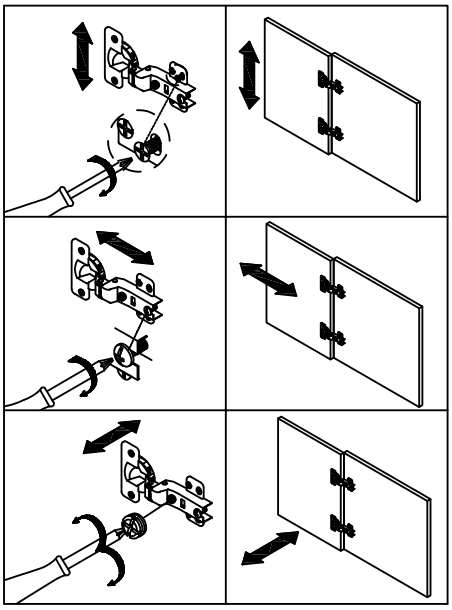



24X
Q

ASSEMBLY INSTRUCTION

DESCRIPTION

1106R1

CLIFTON SIDEBOARD

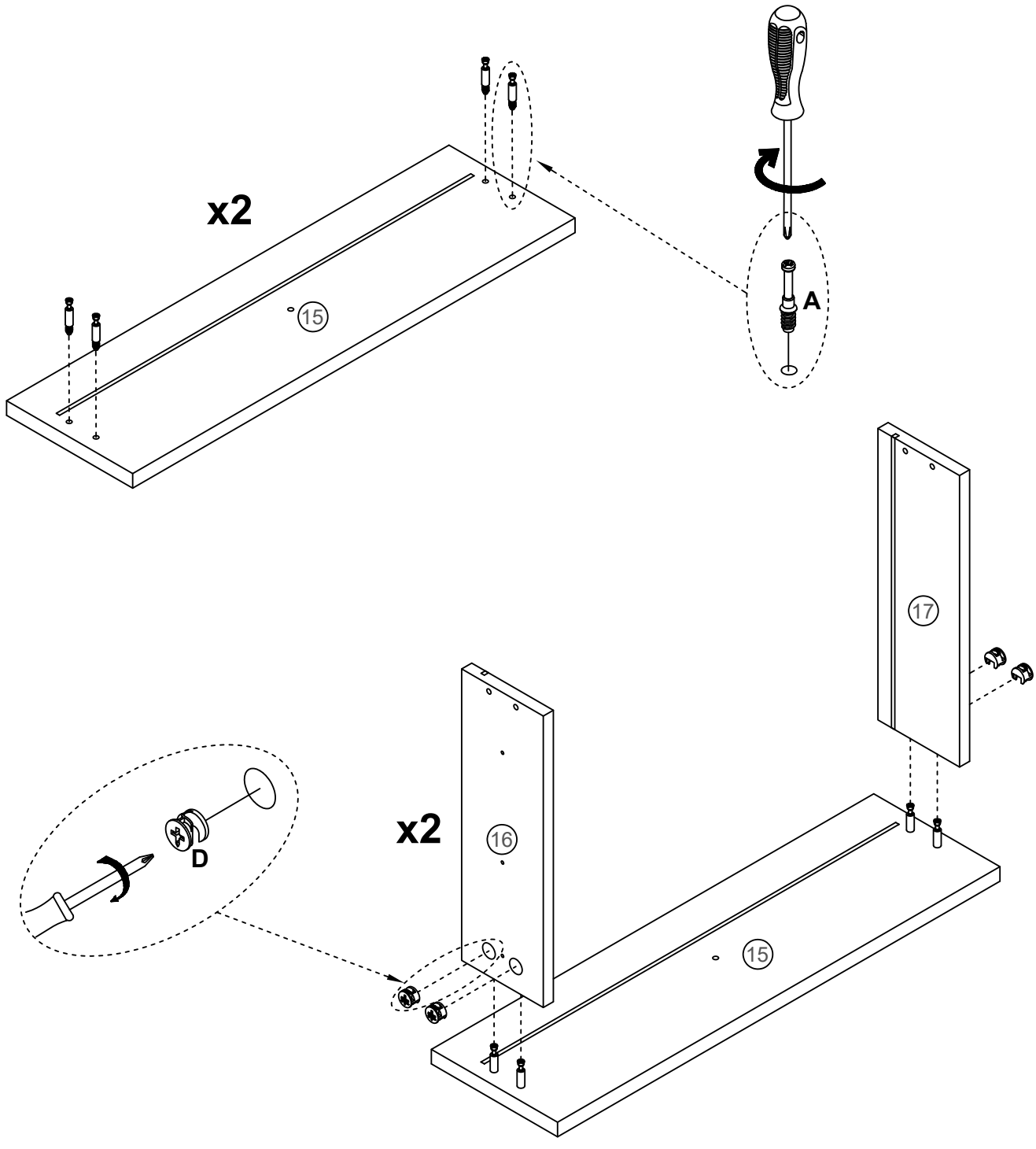

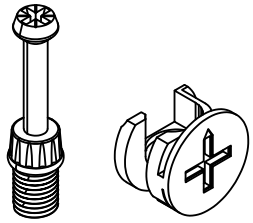

8X
A

8X
D

ASSEMBLY INSTRUCTION

DESCRIPTION

1106R1

CLIFTON SIDEBOARD

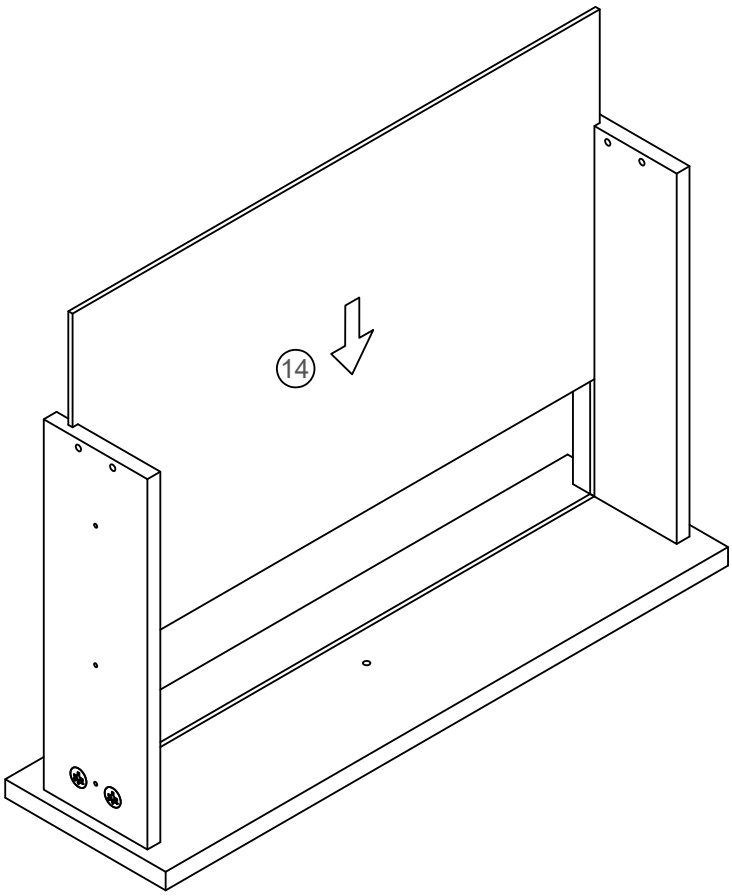

x2

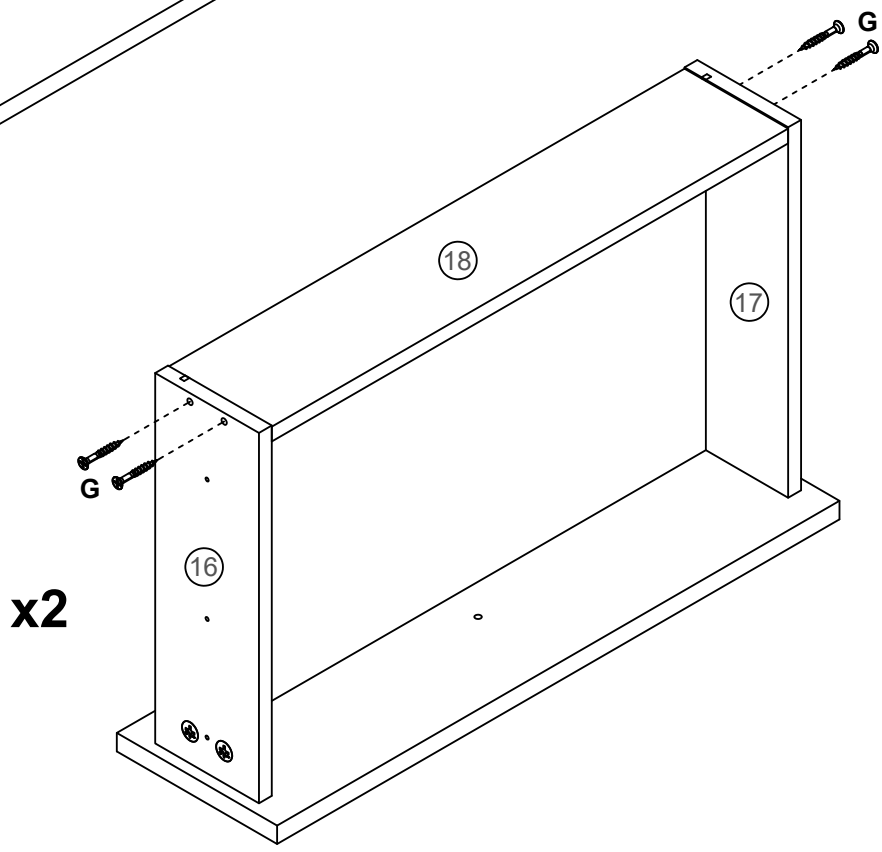

x2

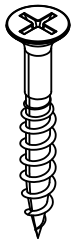

8X
G

ASSEMBLY INSTRUCTION

DESCRIPTION

1106R1

CLIFTON SIDEBOARD

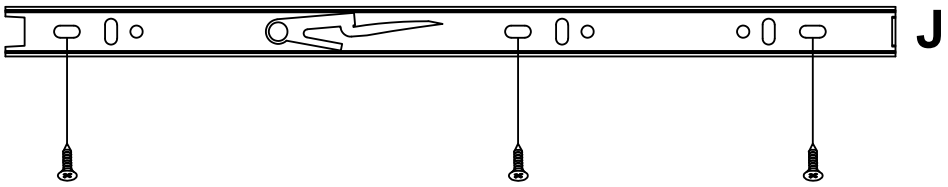

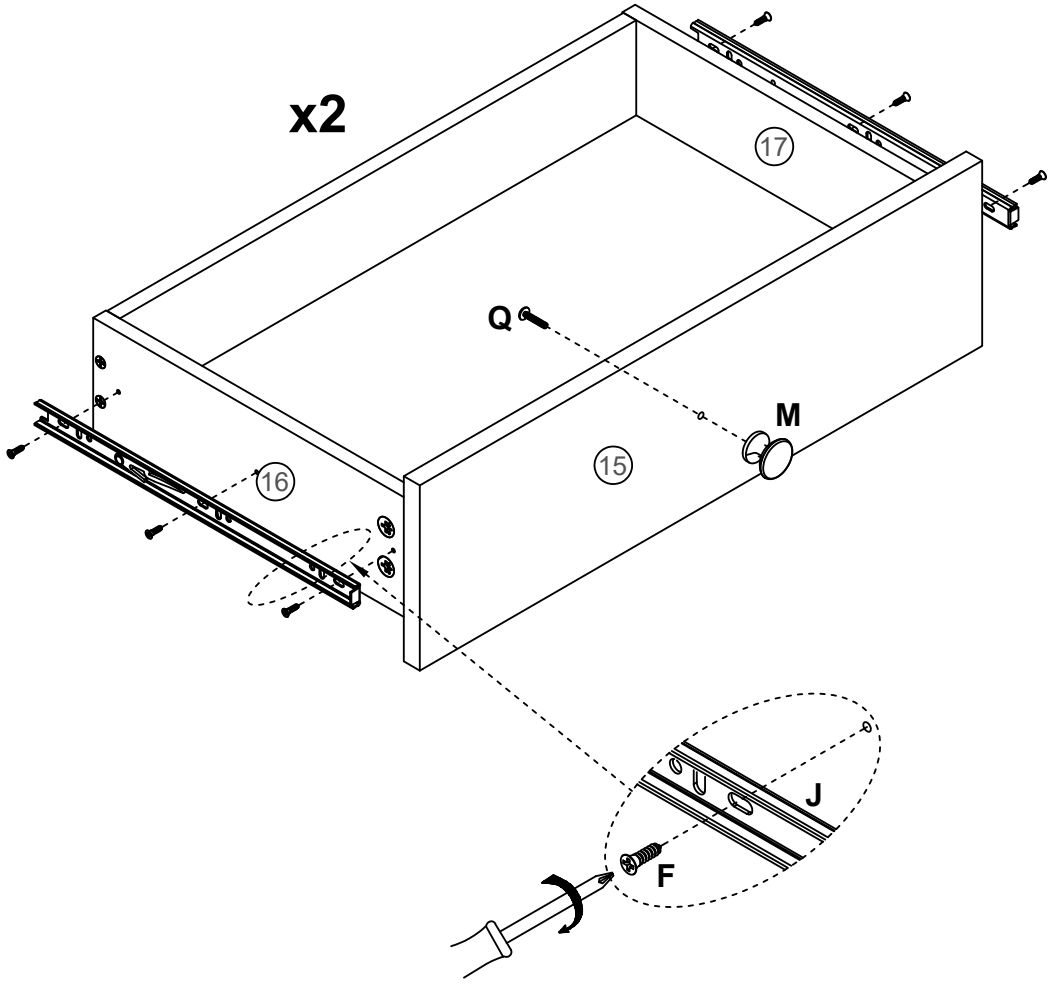

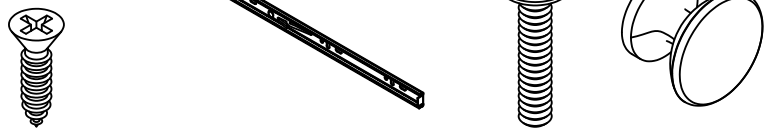

12X
F

4X
J

3X
R

3X
M

ASSEMBLY INSTRUCTION

DESCRIPTION

1106R1

CLIFTON SIDEBOARD

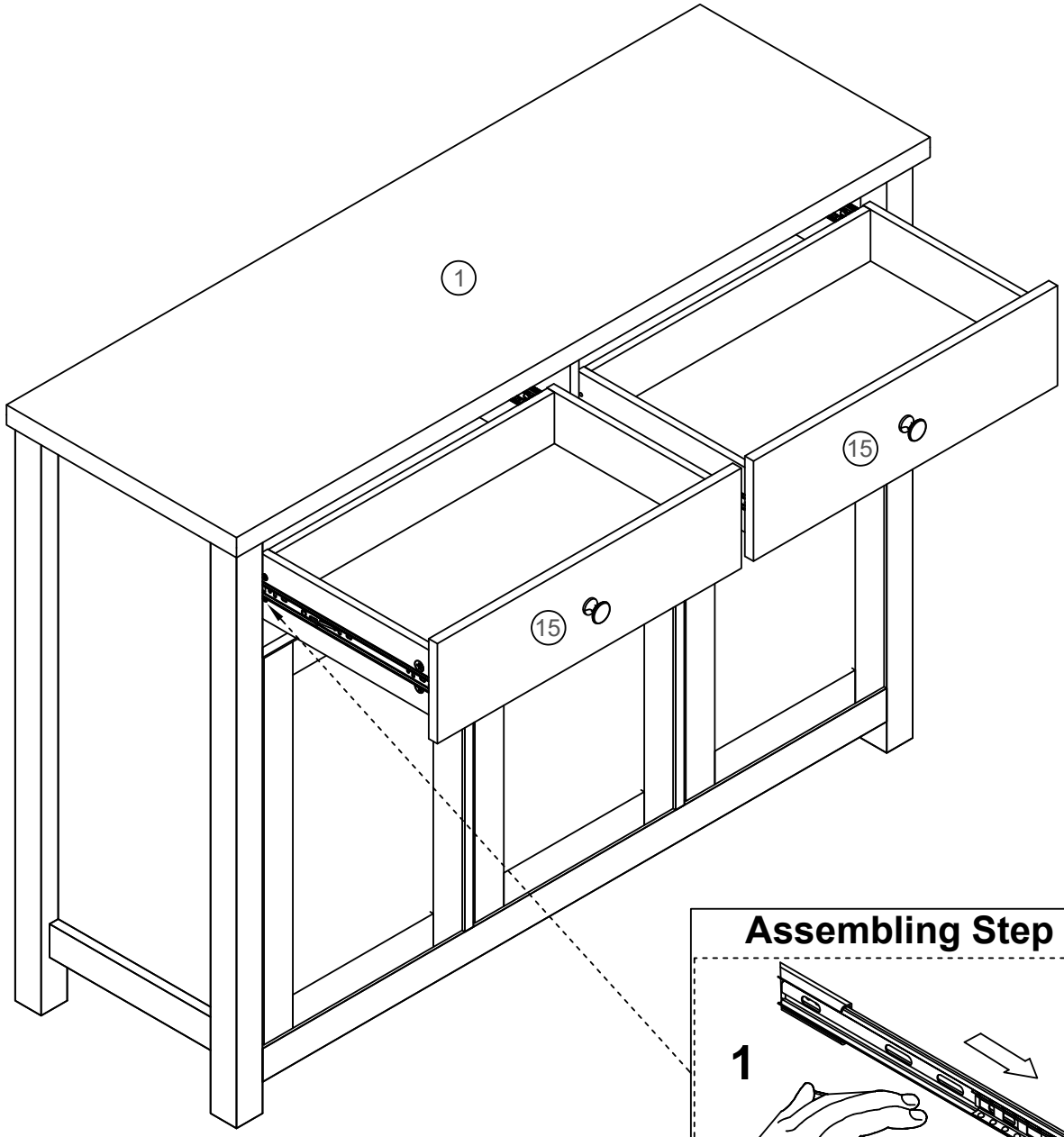

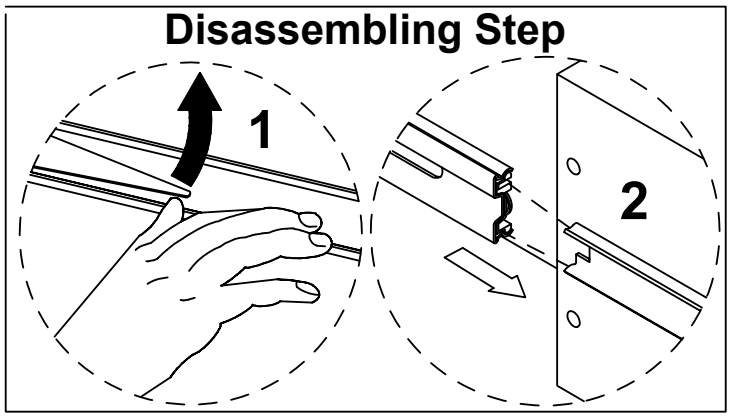

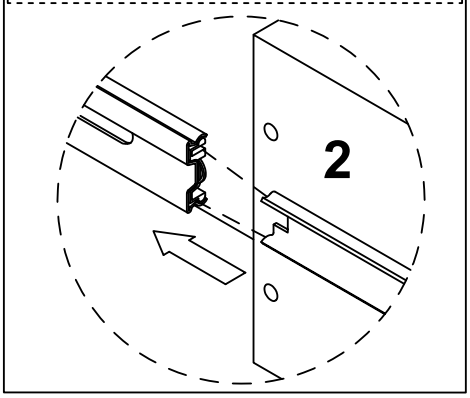

ASSEMBLY INSTRUCTION

DESCRIPTION

1106R1

CLIFTON SIDEBOARD

HOW TO ADJUST YOUR HINGES AND ALIGN THE DOORS

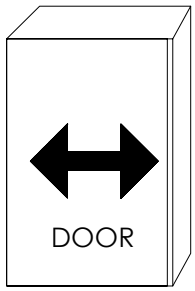

This adjustment is used if your doors are overlapping in the middle OR there is a larger gap through the middle or on the sides

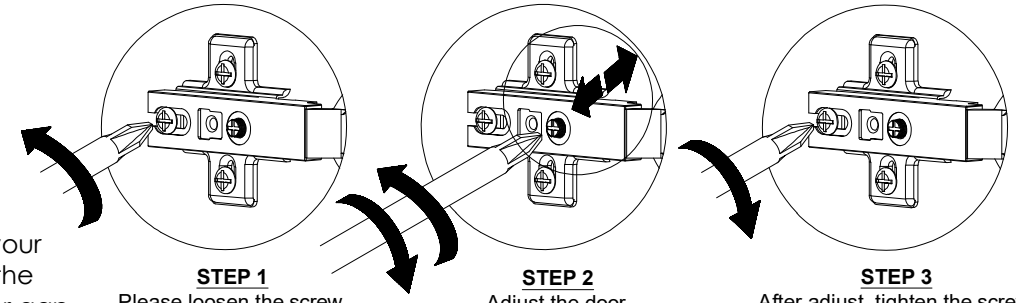

STEP 1
Please loosen the screw to adjust the door.

STEP 2
Adjust the door.

STEP 3
After adjust, tighten the screw.

Follow the adjustments and make sure the middle pin is correctly installed as per previous instructions. If the middle pin isn't correctly installed then this adjustment will not work correctly.

If you tighten/loosen this screw it will adjust the doors to the left/right.

This step usually takes small adjustments and then closing doors to see if the gaps have evened out. Sometimes just half a turn of the screw can make a big impact to the gap.

The hinges are correctly installed and in position once you have a nice straight gap down the sides of the cupboard between the door and the side of the cupboard cavity.

ASSEMBLY INSTRUCTION

DESCRIPTION

1106R1

CLIFTON SIDEBOARD

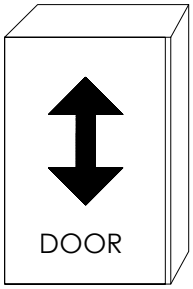

This adjustment is used if your doors have a big gap at the top or the bottom, or if one door sits straight but is lower than the other door.

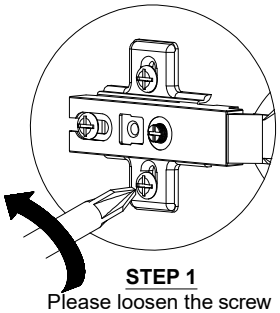

STEP 1
Please loosen the screw to adjust the door.

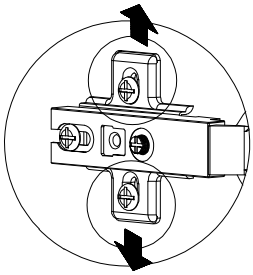

STEP 2
Adjust the door.

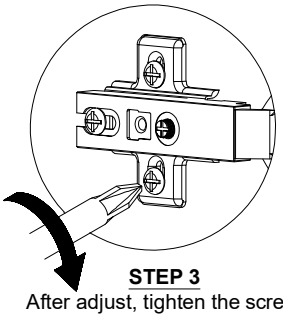

STEP 3
After adjust, tighten the screw.

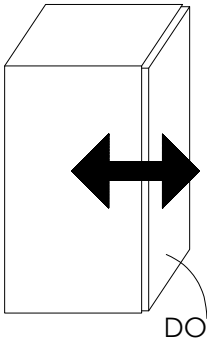

This adjustment is used if your doors are TOO CLOSE to the main cavity. You can loosen the screw and then move the door hinge closer or further out depending on the outcome you want to achieve

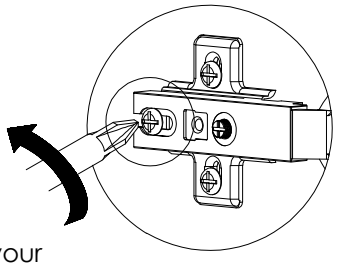

STEP 1
Please loosen the screw to adjust the door.

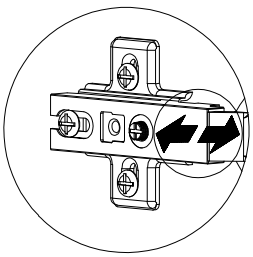

STEP 2
Adjust the door.

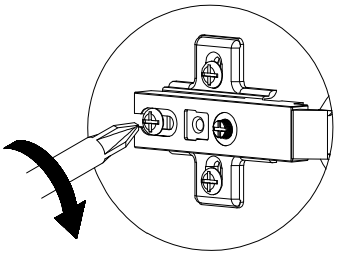

STEP 3
After adjust, tighten the screw.

ASSEMBLY INSTRUCTION

DESCRIPTION

1106R1

CLIFTON SIDEBOARD

FITTING OF ANTI-TIP

STEP 1:
Make a mark on the wall through the strap.

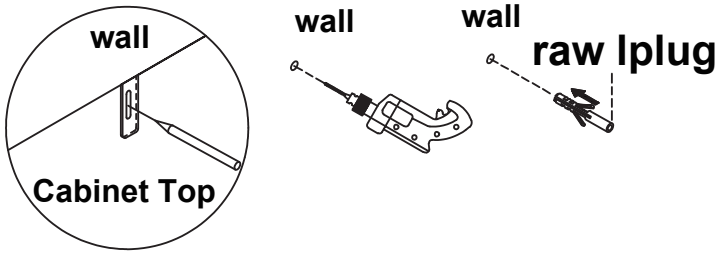

STEP 2:
Insert screw through strap into hole in wall

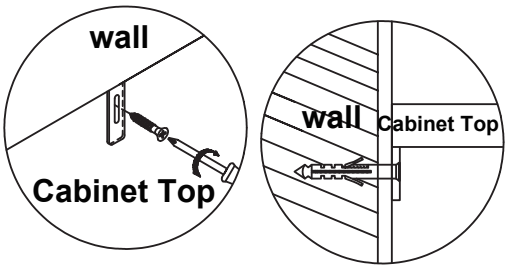

⚠ WARNING

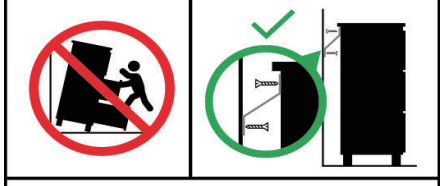

Children have died from furniture tipover.

- ALWAYS secure this furniture with an anchor device.
- NEVER allow children to stand, climb or hang on drawers, doors, or shelves.

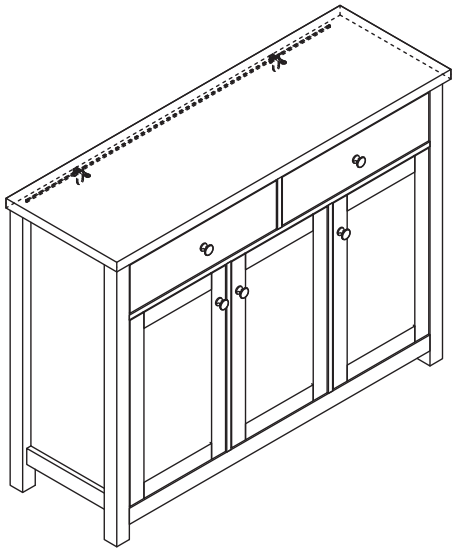

Drill a hole in the wall and insert the rawlplug

NOTE:wall fixings are not supplied with this product as different wall materials require different types of fixing devices(such as Rawl plugs on brick work).you must use fixing devices suitable for the type of wall you intend to mount this product. Please ensure that the head of any screw used has a diameter greater that the diameter of the mounting hole on the product and that the fixing is safe and secure before use.

The screw supplied is to fix the bracket to the cabinet.