ASSEMBLY INSTRUCTION

DESCRIPTION

2004OAK

Miami E**ntertainment** U**nit**

1.5hr

APPROXIMATE ASSEMBLY TIME

2 PERSON ASSEMBLY

FLOOR AREA
2MX2M

REQUIRED ASSEMBLY SPACE

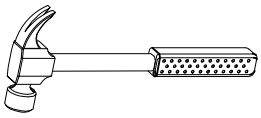

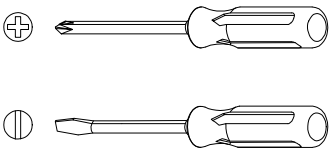

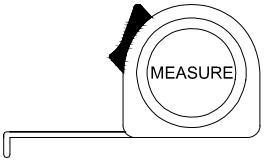

REQUIRED ASSEMBLY TOOLS

ASSEMBLED DIMENSIONS

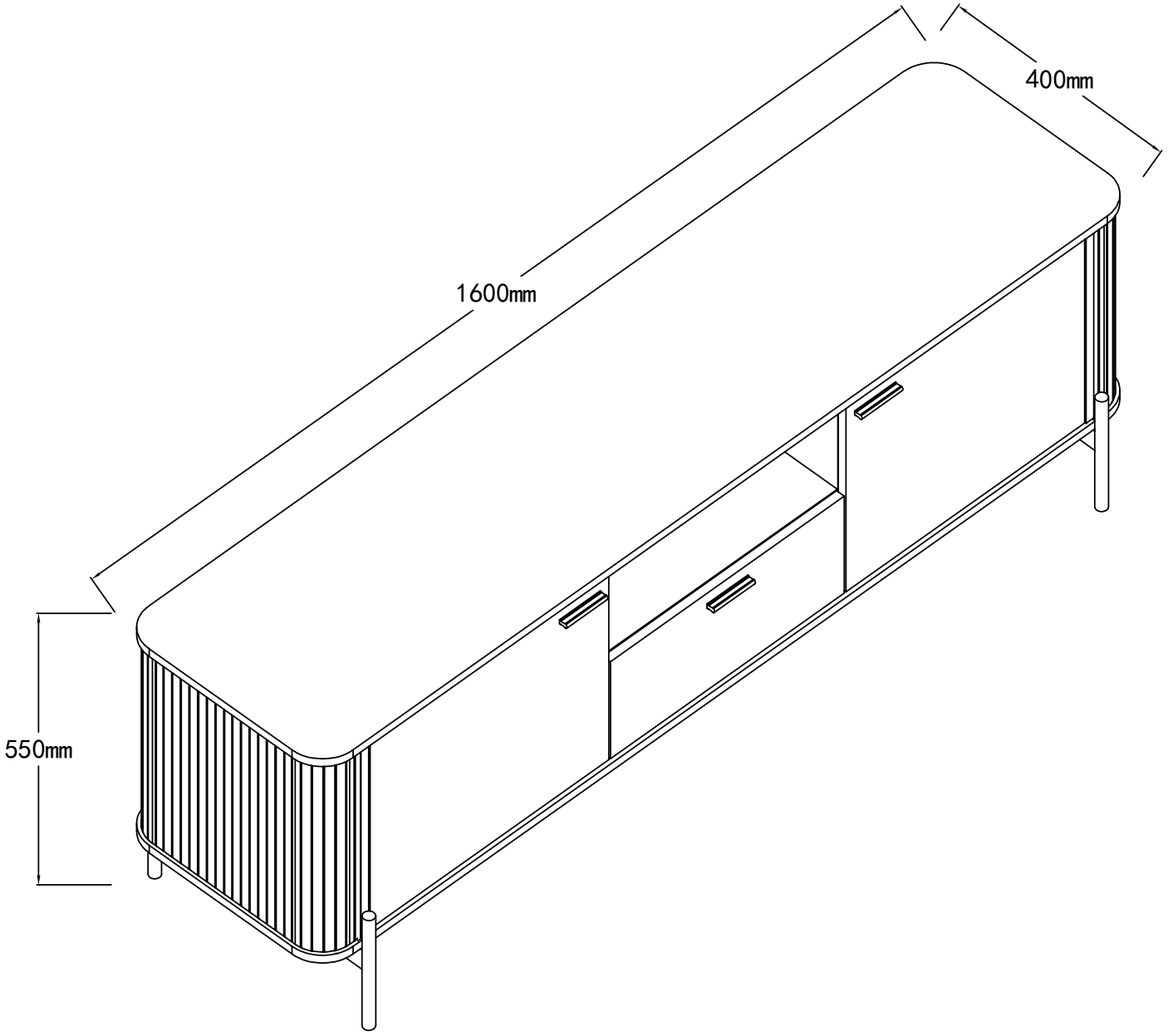

ASSEMBLY INSTRUCTION

DESCRIPTION

2004 OAK

Miami Entertainment Unit

WARNING : ENSURE THE WALL STRAP IS ATTACHED TO AVOID SERIOUS INJURY OR DEATH.

To avoid any serious or fatal injury, a wall strap has been provided with this product to prevent toppling. Always secure this product with an anchor device to the wall or suitable surface. Wall fixing hardware are not included since different surface materials require different attachments. Please seek professional advice if you are in doubt of what fixing device to use.

Your product has been provided with a permanent safety label that should never be removed for safety reasons.



ASSEMBLY INSTRUCTION

DESCRIPTION

2004OAK

Miami E**ntertain**m**ent** U**nit**

PARTS LIST

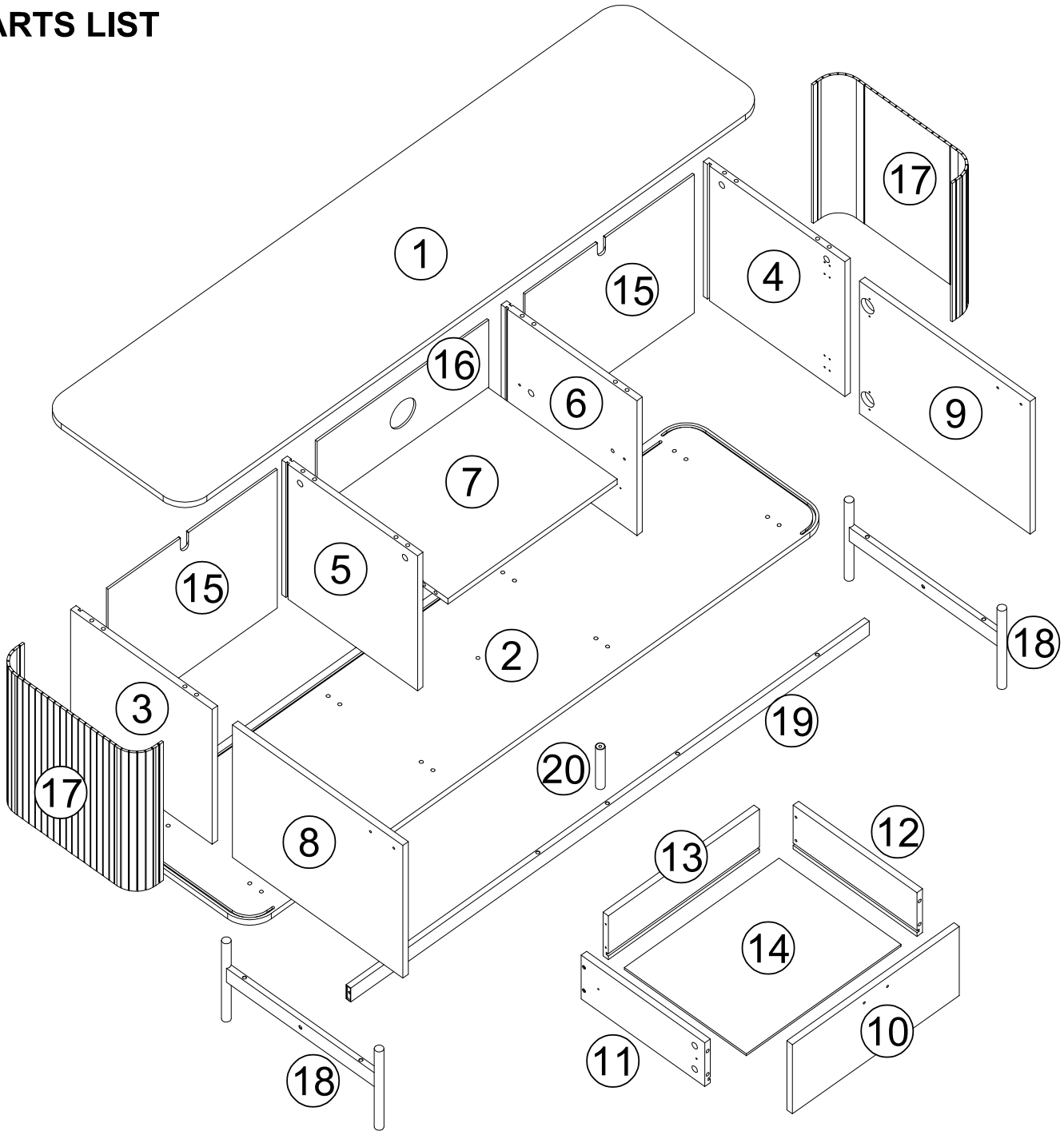

NO.	PARTS LIST	QTY
(1)	Part 1	1
(2)	Part 2	1
(3)	Part 3	1
(4)	Part 4	1
(5)	Part 5	1
(6)	Part 6	1
(7)	Part 7	1
(8)	Part 8	1
(9)	Part 9	1

NO.	PARTS LIST	QTY
(10)	Part 10	1
(11)	Part 11	1
(12)	Part 12	1
(13)	Part 13	1
(14)	Part 14	1
(15)	Part 15	2
(16)	Part 16	1
(17)	Part 17	2
(18)	Part 18	2
(19)	Part 19	1
(20)	Part 20	1

ASSEMBLY INSTRUCTION

DESCRIPTION

2004OAK

Miami E**ntertain**m**ent** U**nit**

HARDWARE LIST

A x16	B x16	C x20	D x8	E x44	F x12	G x3	H x6
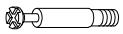							
M6x35mm	Φ15mm	Φ8x30mm	M7x50mm	M3.5x14mm	Φ20mm		M4x18mm

I x12	J x2	K x8	L x2	M x2	N x1	O x4	P x4
	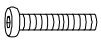	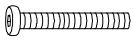	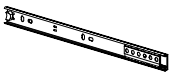		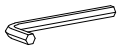	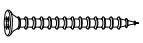	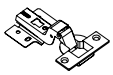
	M6x30mm	M6x48mm			4mm	M4x35mm	

Q x2	R x2	S x2	T x2	U x1	V x1
					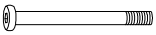
M4x12mm	M4x35mm				M6x75mm

ASSEMBLY INSTRUCTION

DESCRIPTION

2004OAK

Miami E**ntertainment** U**nit**

Top Tips before you start!

1. Please check that all parts are present before you start the assembly of your furniture, as once assembled,the furniture is exempt from our home approval policy.

2. For ease and speed of assembly,we recommend that before you commence each step of the assembly,that you identify all the parts required for that step.

3. For larger items,please ensure that you have sufficient space and people(as indicated on page 1) to assemble your product safely.

4. We recommend that,where possible,all items are assembled near to the area in which they will be placed in use,to avoid moving the product unnecessarily once assembled.

5. For the protection of your furniture,particularly items of high gloss finish,we recommend that the product is placed on a protected surface during assembly to prevent any damage.

6. During assembly please take care not to over-tighten any fittings,as this may damage the product.

Care and Maintenance of your Furniture

- Please periodically check all fittings and re-tighten as necessary.
- Please do not drag or pull your furniture.
- Wipe occasionally with a soft cloth slightly dampened with water.Then buff with a dry clean soft cloth.
- Never allow any kind of liquid to remain on your furniture.Absorption can cause wood to warp or finishes to de-laminate.
- Please do not sit or stand on this item.

ASSEMBLY INSTRUCTION

DESCRIPTION

2004OAK

Miami E**ntertainment** Unit

SPECIAL TIPS FOR FITTING CAM-LOCKS AND CAM-BOLTS

CAM-LOCK

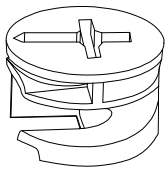

WHEN FITTING CAMS

ENSURE STARTING POSITION IS CORRECT
BEFORE YOU INSERT CONNECTING CAM-BOLTS
TURN CLOCKWISE UNTIL SECURE

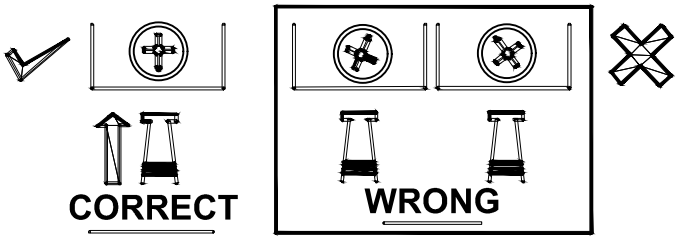

Align with long point of cross

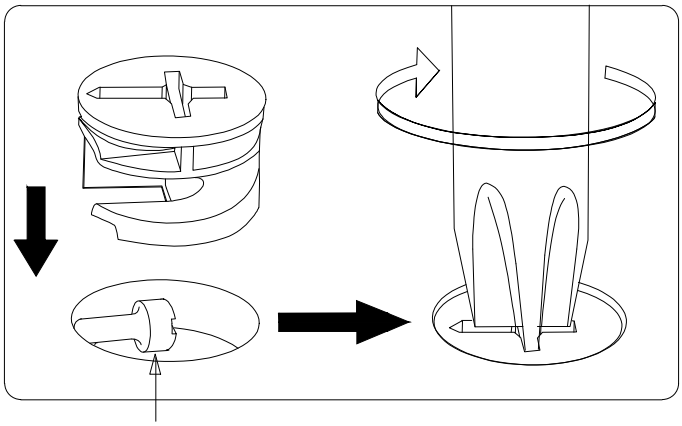

Lock head needs to be in centre

CAM-BOLT

Tighten until shoulder is flush with panel.Do not overtighten or undertighten (see example below)

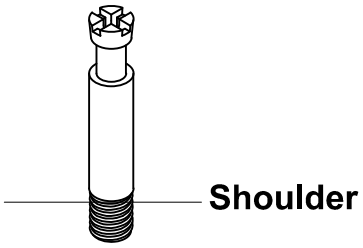

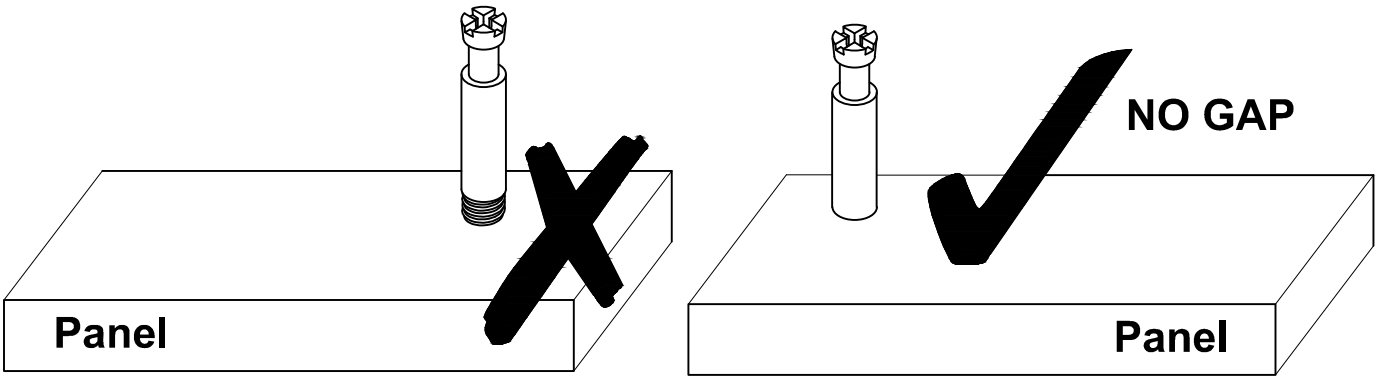

ASSEMBLY INSTRUCTION

DESCRIPTION

2004OAK

Miami E**ntertain**m**ent** U**nit**

STEP 1

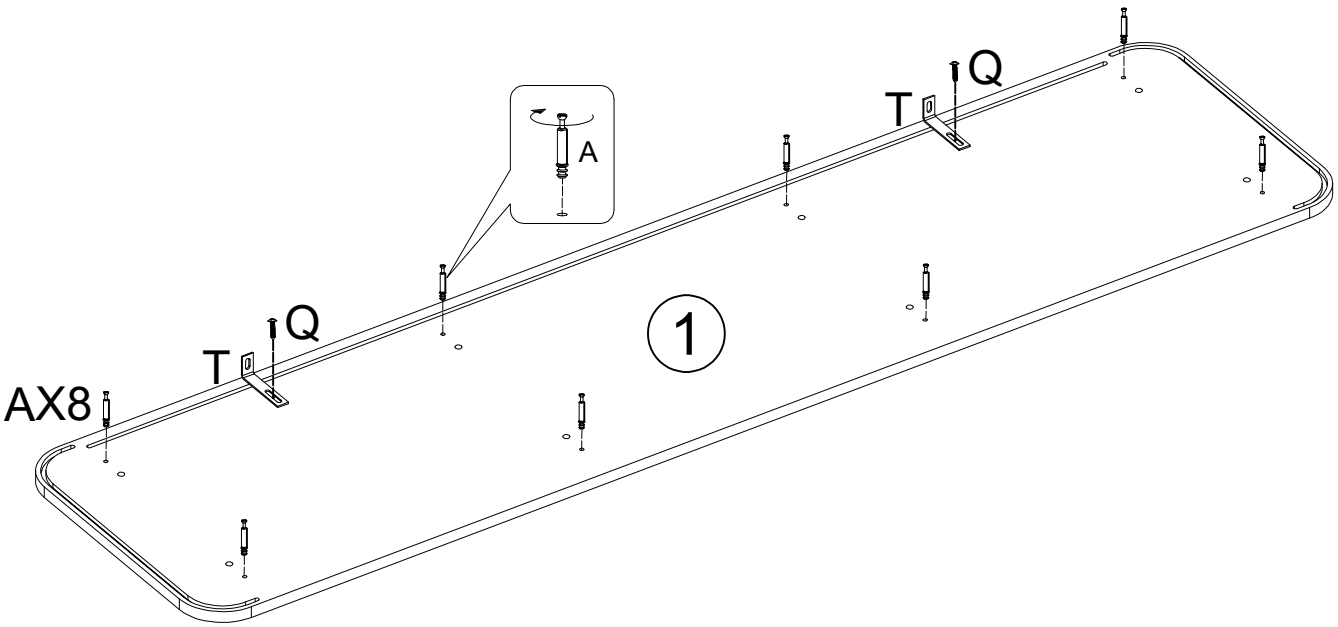

A	x8	Q	x2	T	x2
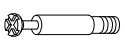					
M6x35mm		M4x12mm			

ASSEMBLY INSTRUCTION

DESCRIPTION

2004OAK

Miami E**ntertain**m**ent** U**nit**

STEP 2

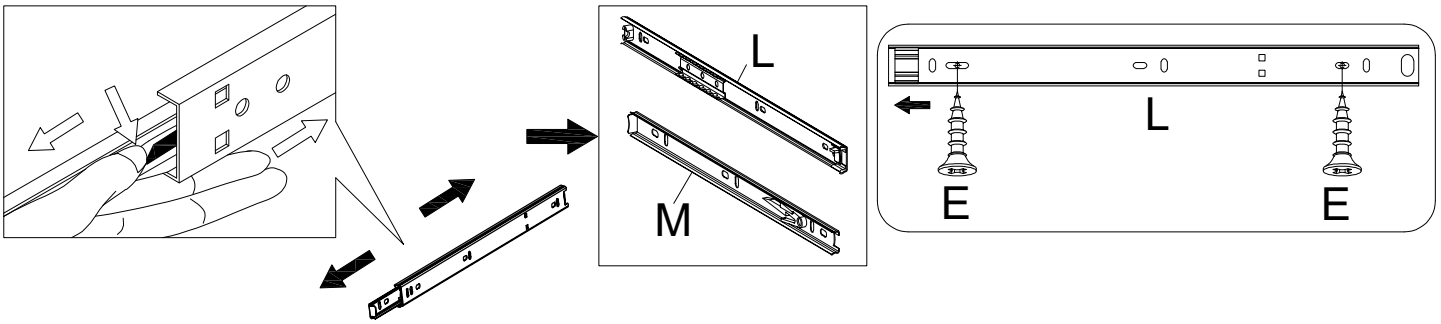

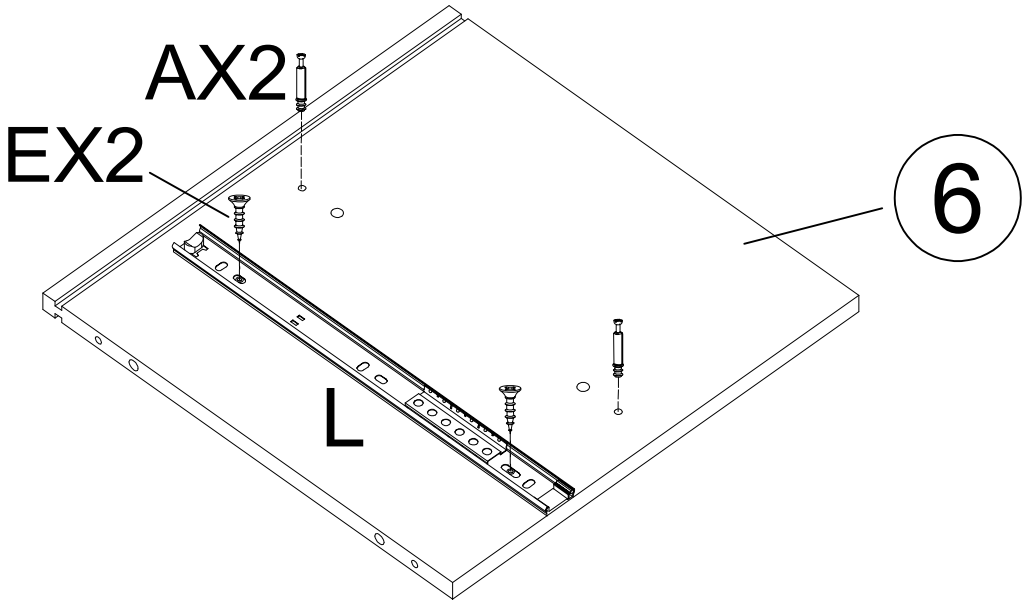

A	x2	E	x2	L	x1
M6x35mm		M3.5x14mm			

ASSEMBLY INSTRUCTION

DESCRIPTION

2004OAK

Miami E**ntertain**m**ent** U**nit**

STEP 3

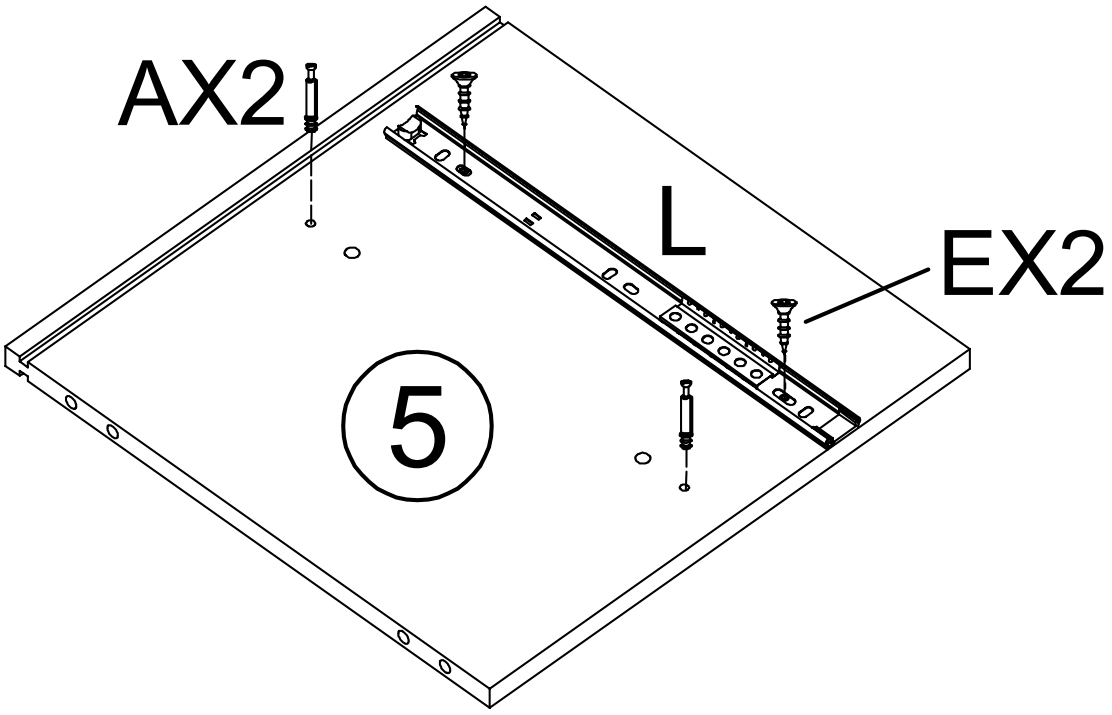

A	x2	E	x2	L	x1
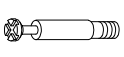				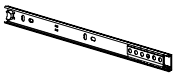	
M6x35mm		M3.5x14mm			

ASSEMBLY INSTRUCTION

DESCRIPTION

2004OAK

Miami E**ntertain**m**ent** U**nit**

STEP 4

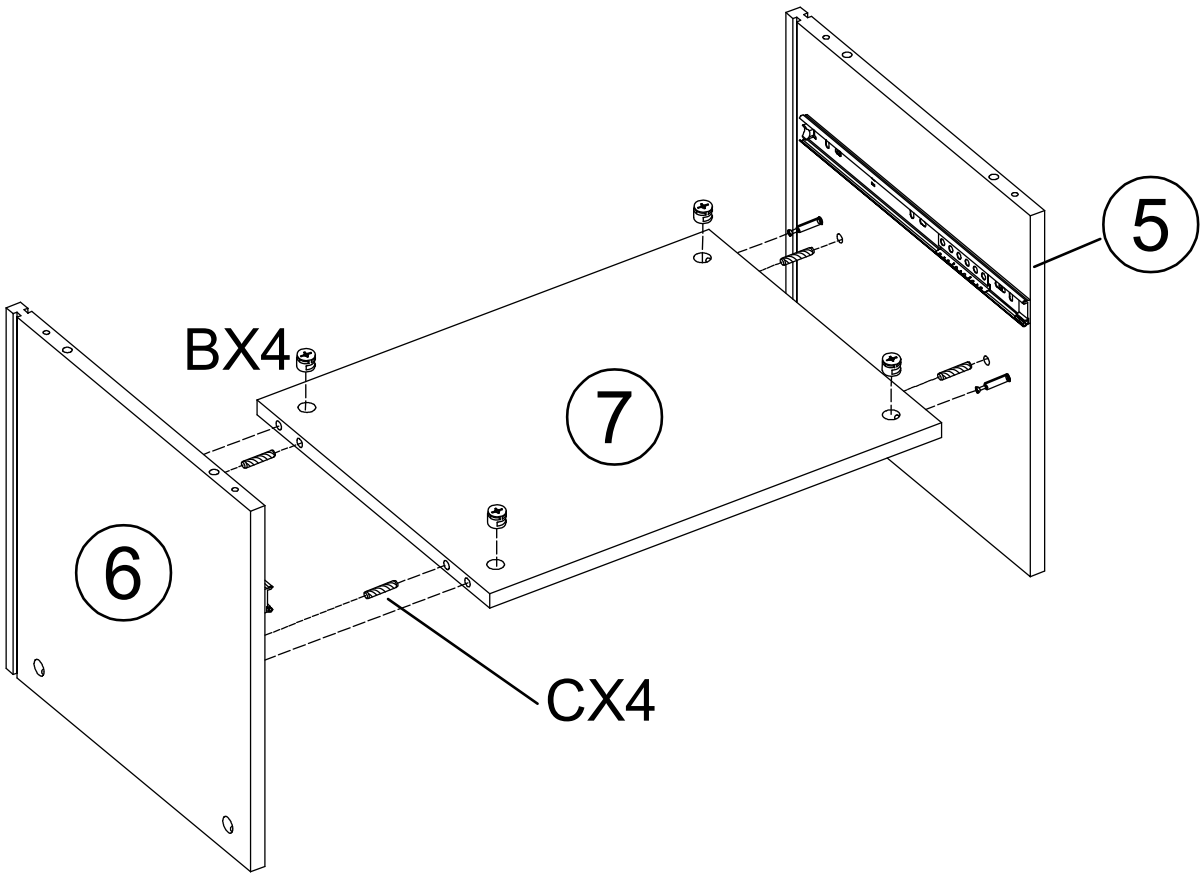

B	x4	C	x4
			
Φ15mm		Φ8x30mm	

ASSEMBLY INSTRUCTION

DESCRIPTION

2004OAK

Miami E**ntertain**m**ent** U**nit**

STEP 5

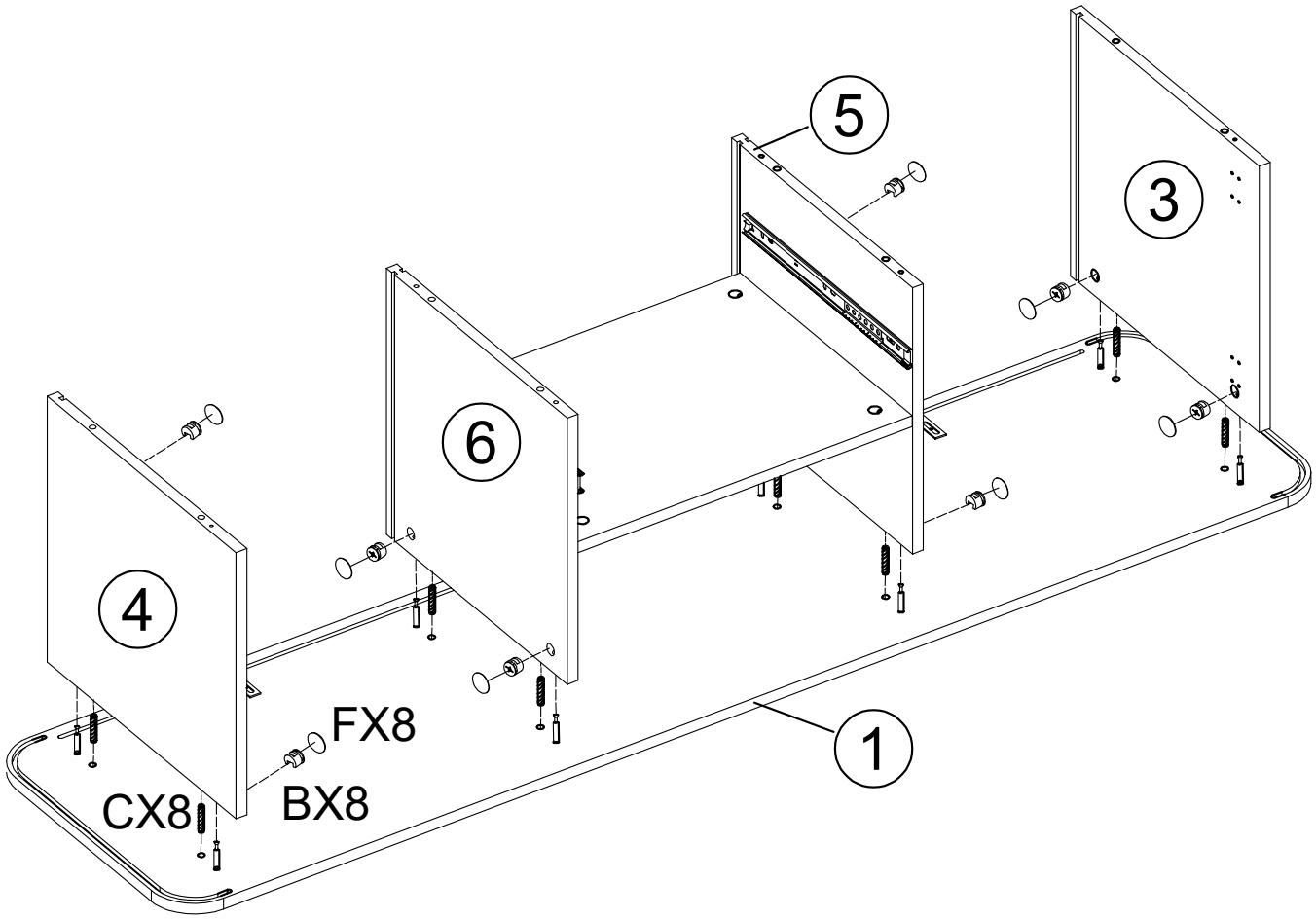

B	x8	C	x8	F	x8
					
Φ15mm		Φ8x30mm		Φ20mm	

ASSEMBLY INSTRUCTION

DESCRIPTION

2004OAK

Miami E**ntertain**m**ent** U**nit**

STEP 6

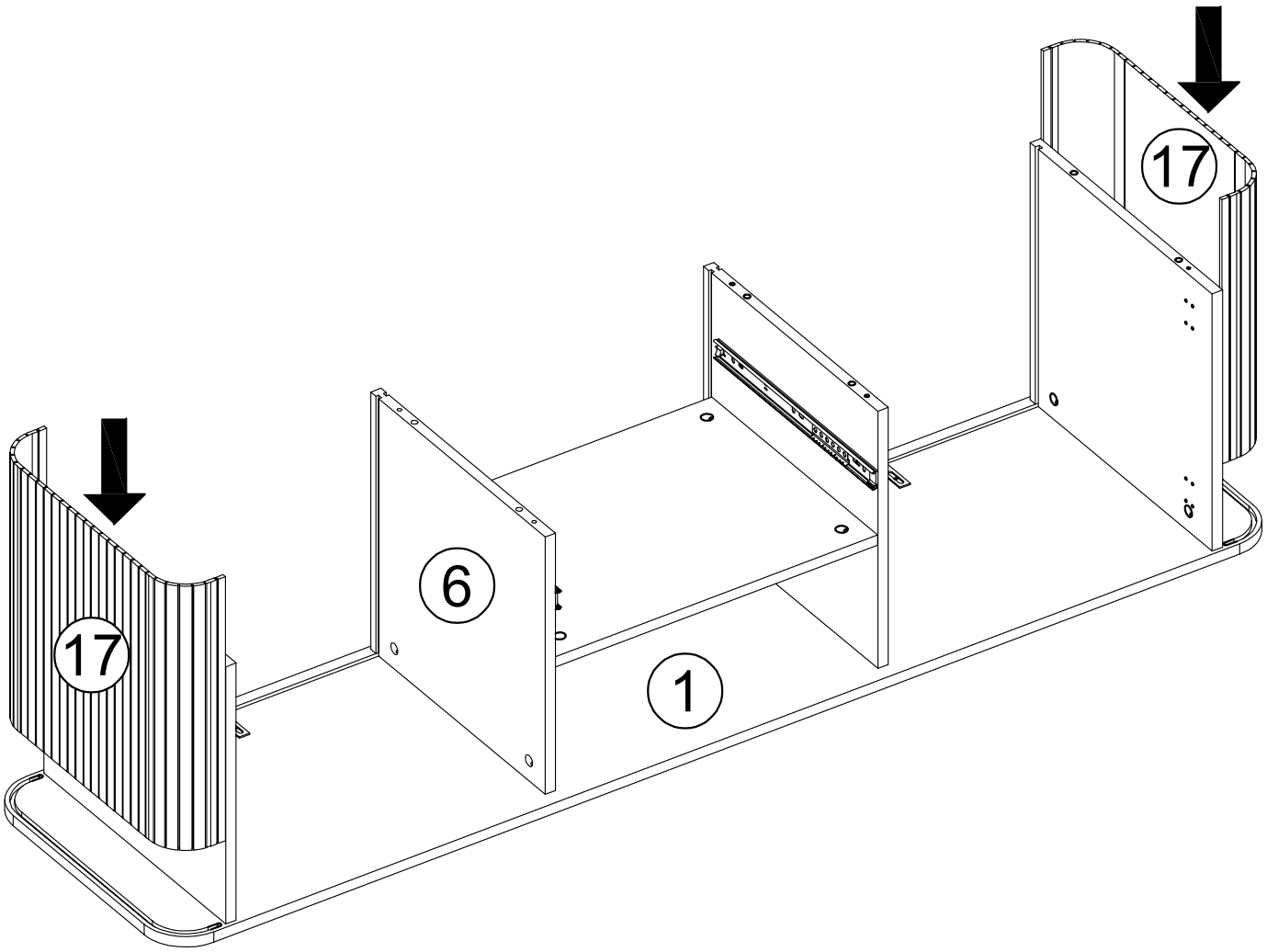

ASSEMBLY INSTRUCTION

DESCRIPTION

2004OAK

Miami E**ntertain**m**ent** U**nit**

STEP 7

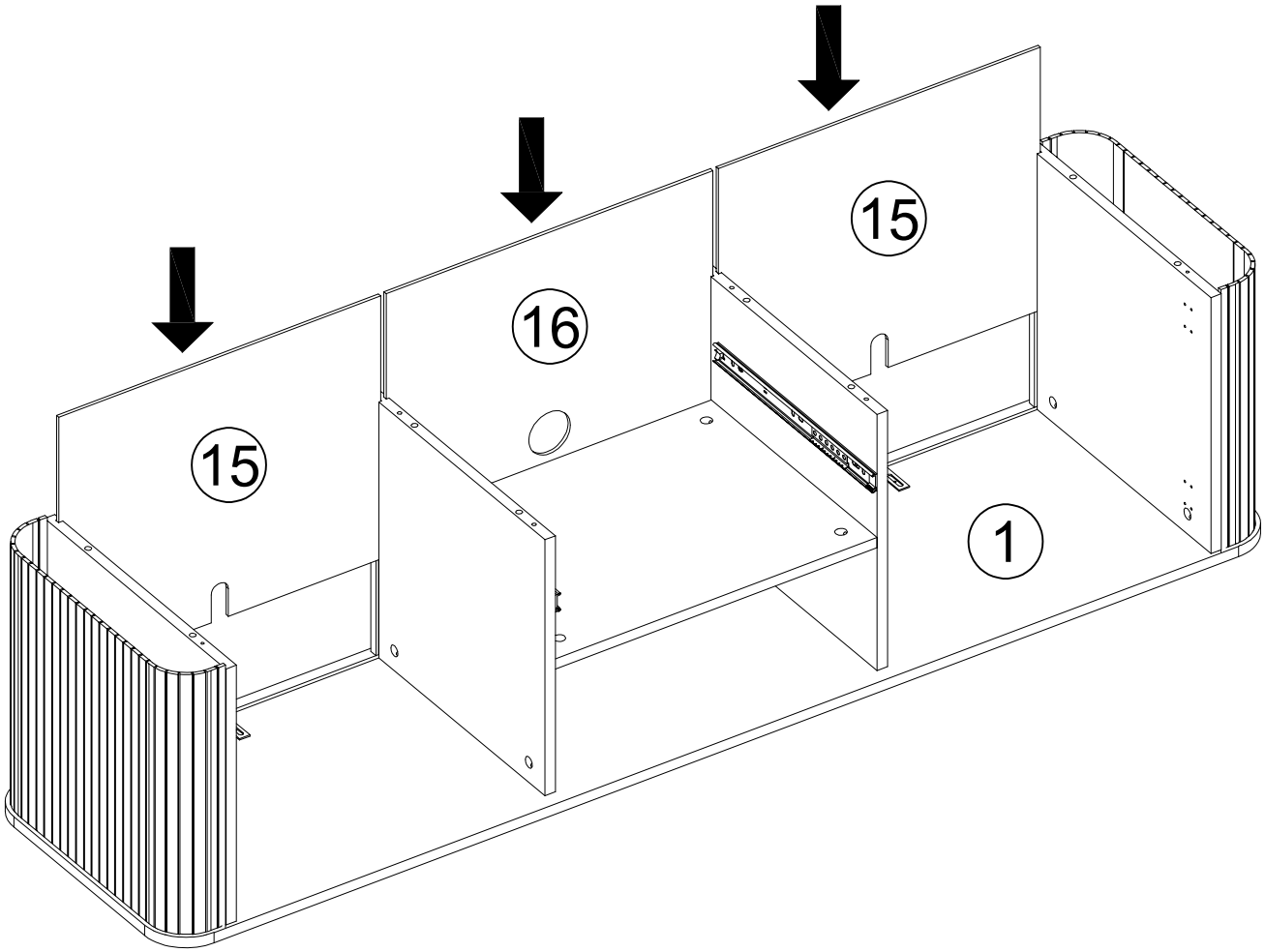

ASSEMBLY INSTRUCTION

DESCRIPTION

2004OAK

Miami E**ntertainment** U**nit**

STEP 8

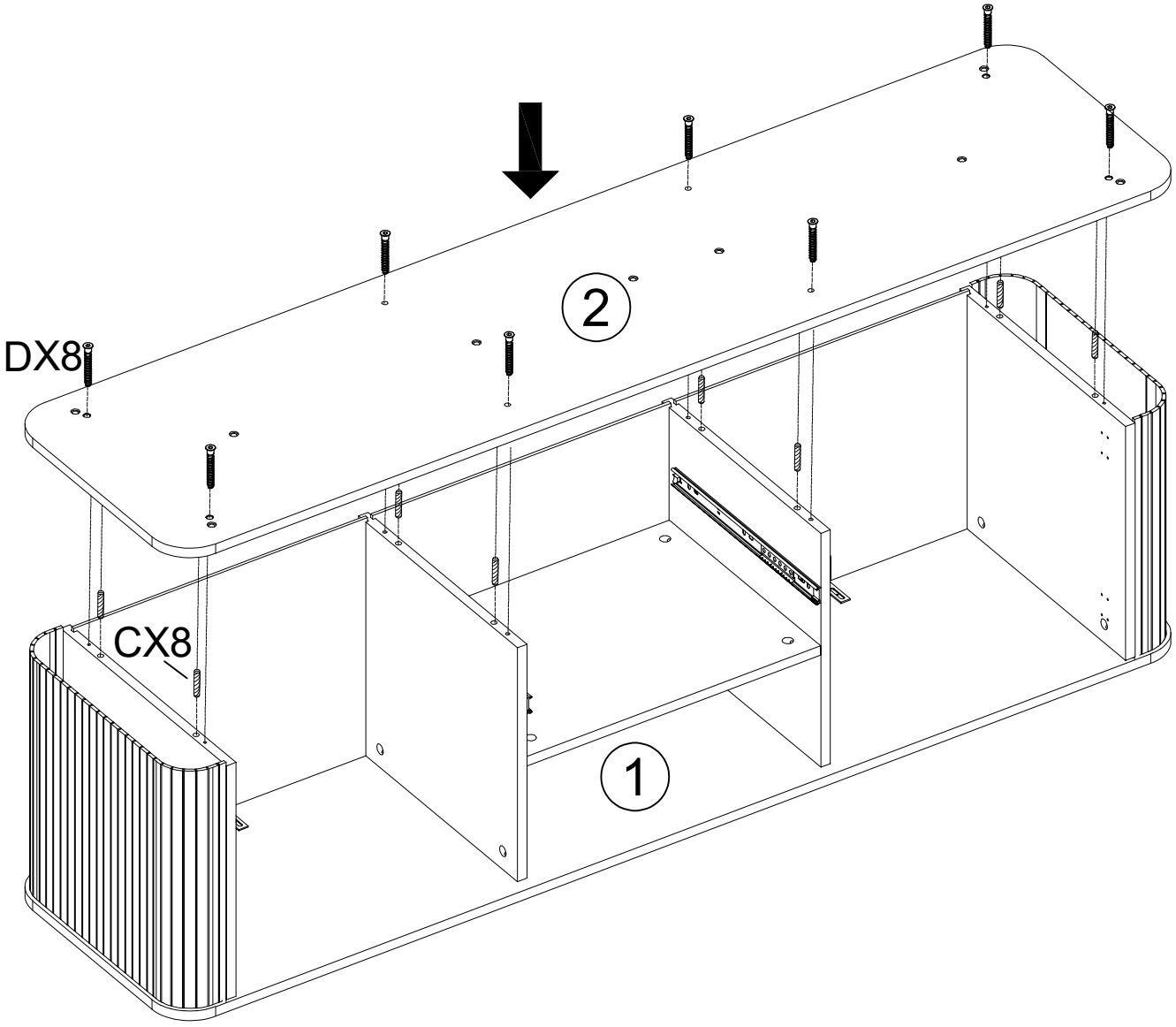

C	**X**8	D	**X**8	N	**X**1
					
Φ8x30mm		M7x50mm		4mm	

ASSEMBLY INSTRUCTION

DESCRIPTION

2004OAK

Miami E**ntertain**m**ent** U**nit**

STEP 9

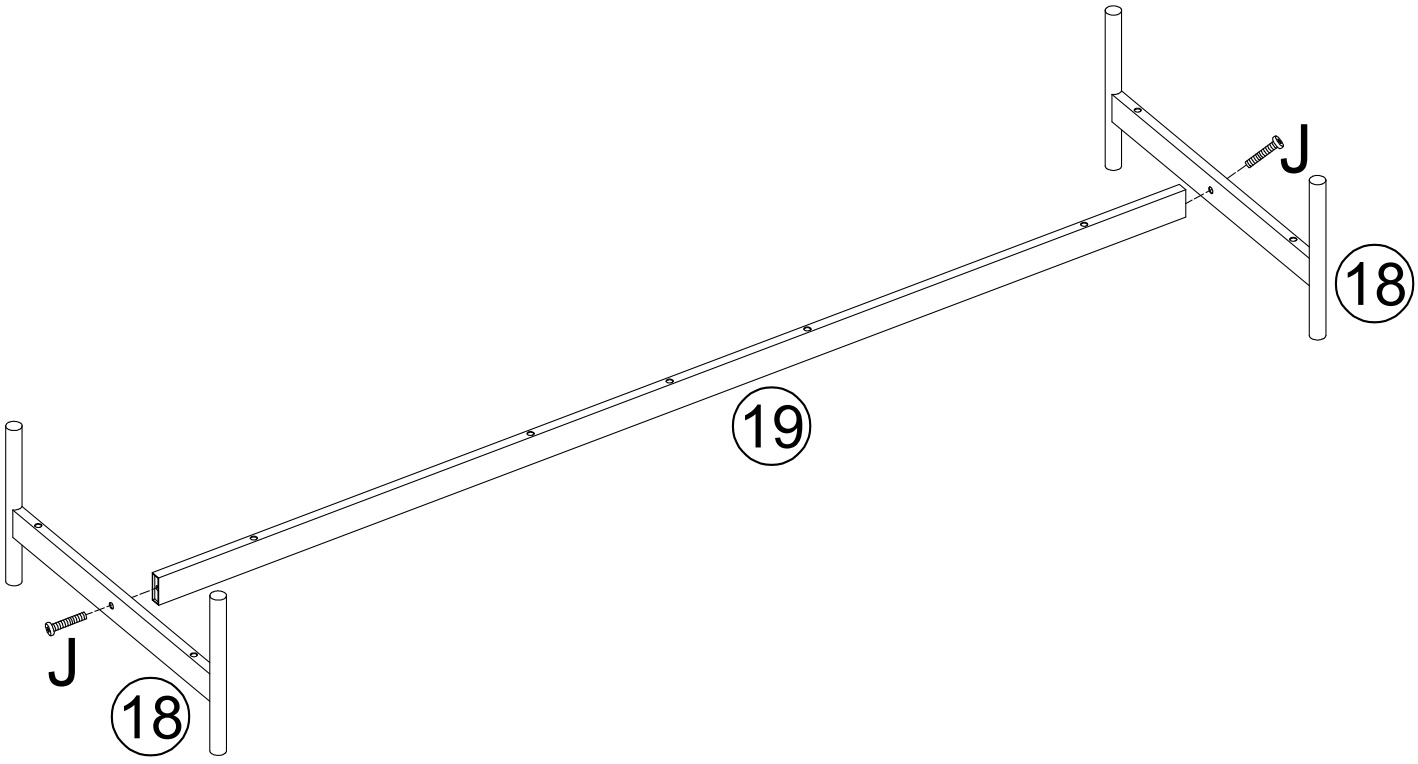

J	x2	N	x1
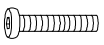		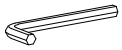	
M6x30mm		4mm	

ASSEMBLY INSTRUCTION

DESCRIPTION

2004OAK

Miami E**ntertainment** U**nit**

STEP10

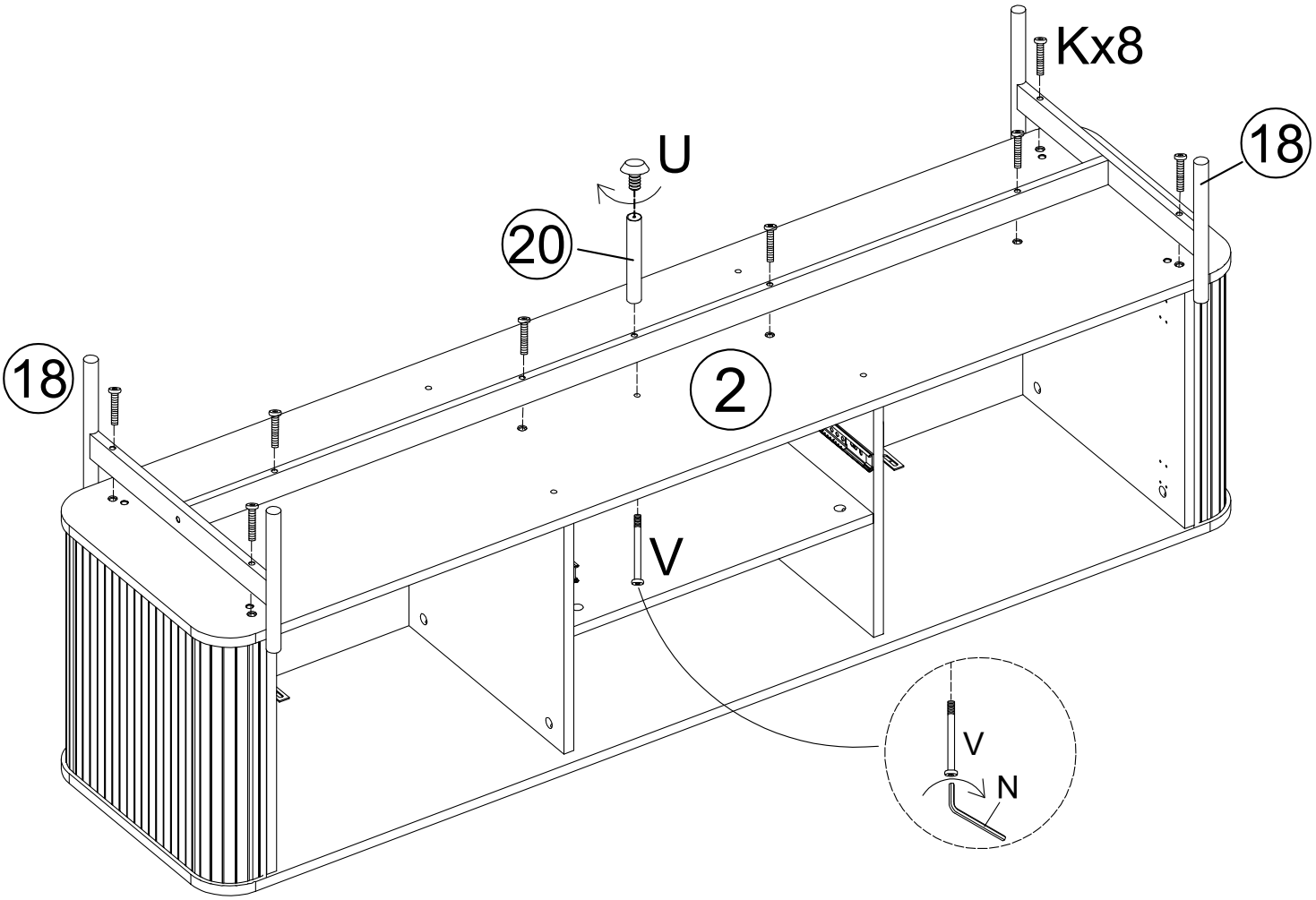

K	x8	N	x1	U	x1	V	x1
M6x48mm		4mm				M6x75mm	

ASSEMBLY INSTRUCTION

DESCRIPTION

2004OAK

Miami E**ntertai**n**ment** U**nit**

STEP11

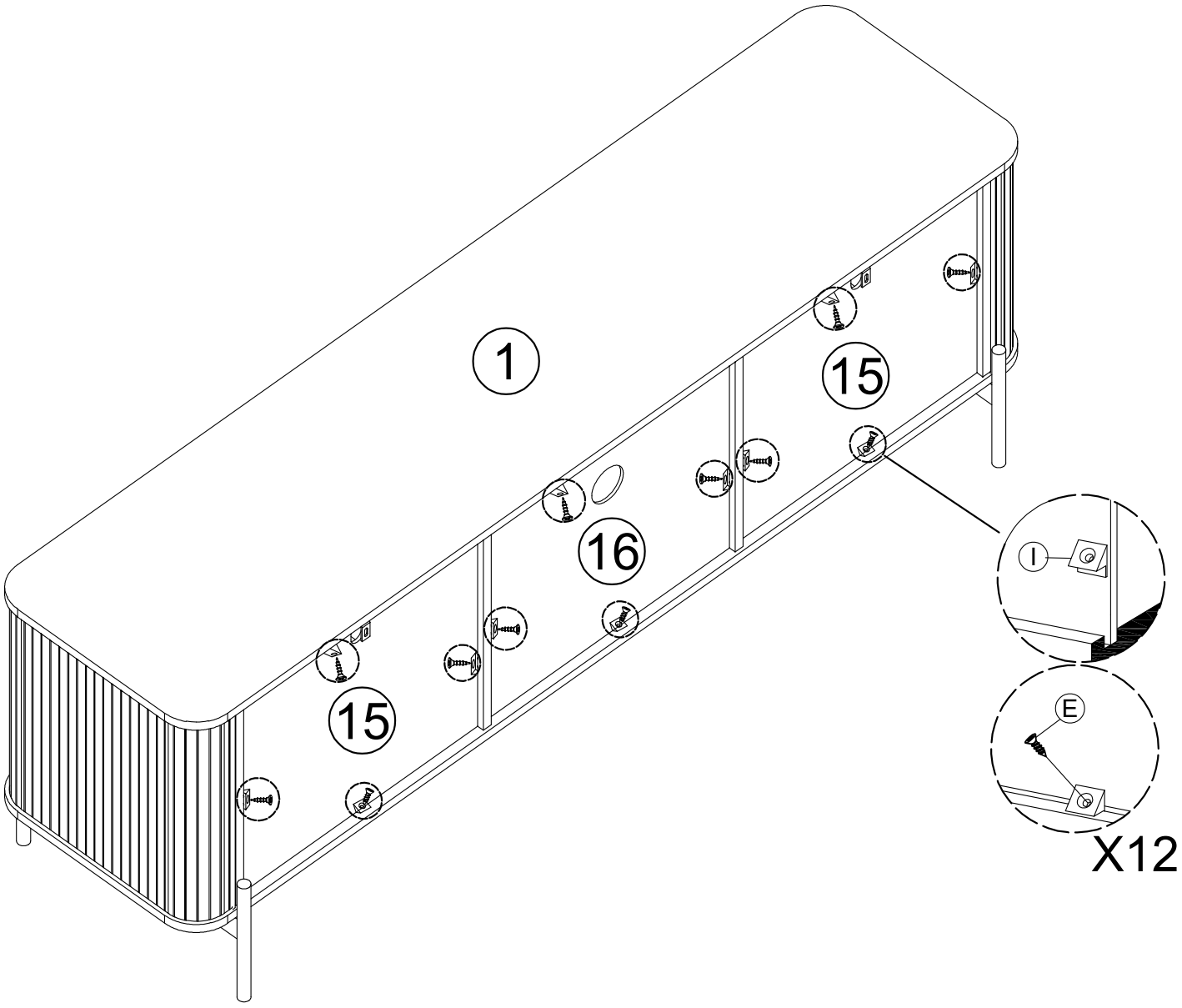

I	x12	E	x12
			
			M3.5x14mm

ASSEMBLY INSTRUCTION

DESCRIPTION

2004OAK

Miami E**ntertainment** U**nit**

STEP12

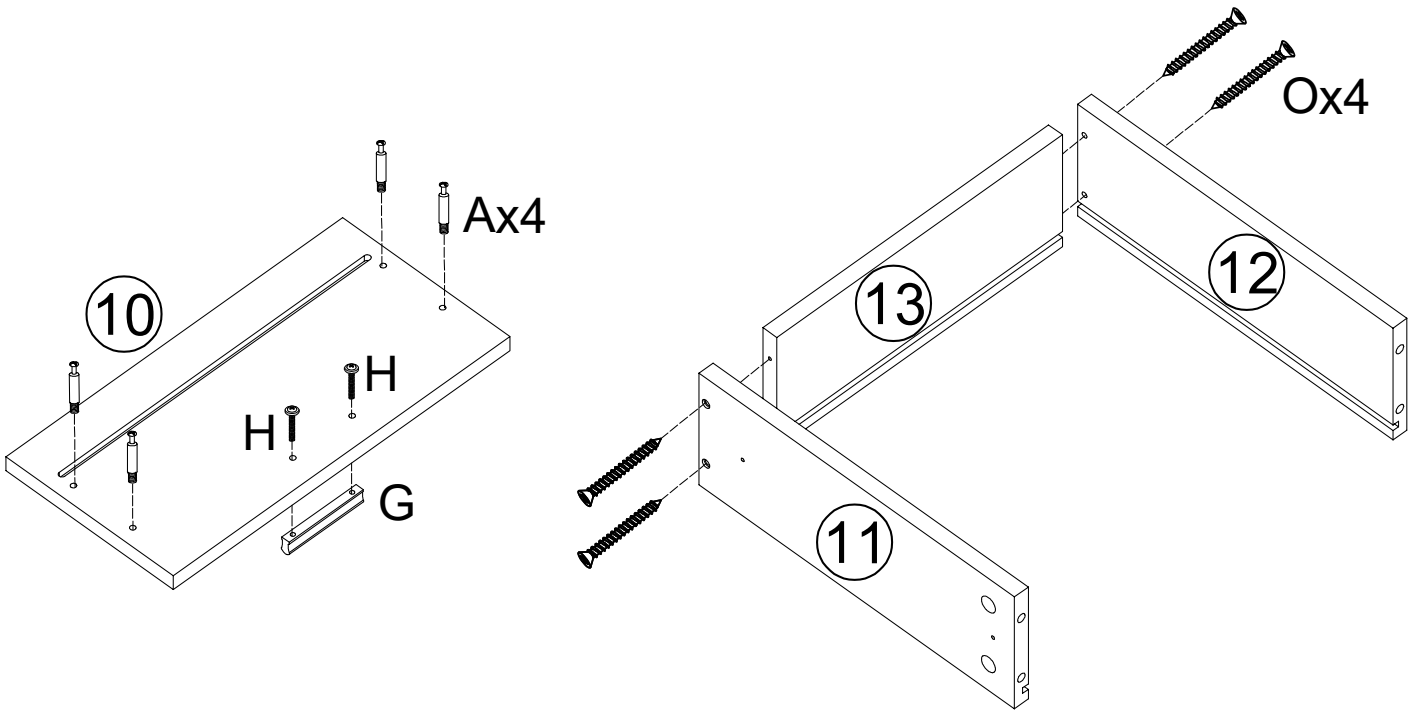

A	x4	G	x1	H	x2	O	x4
M6x35mm				M4x18mm		M4x35mm	

ASSEMBLY INSTRUCTION

DESCRIPTION

2004OAK

Miami E**ntertain**m**ent** U**nit**

STEP13

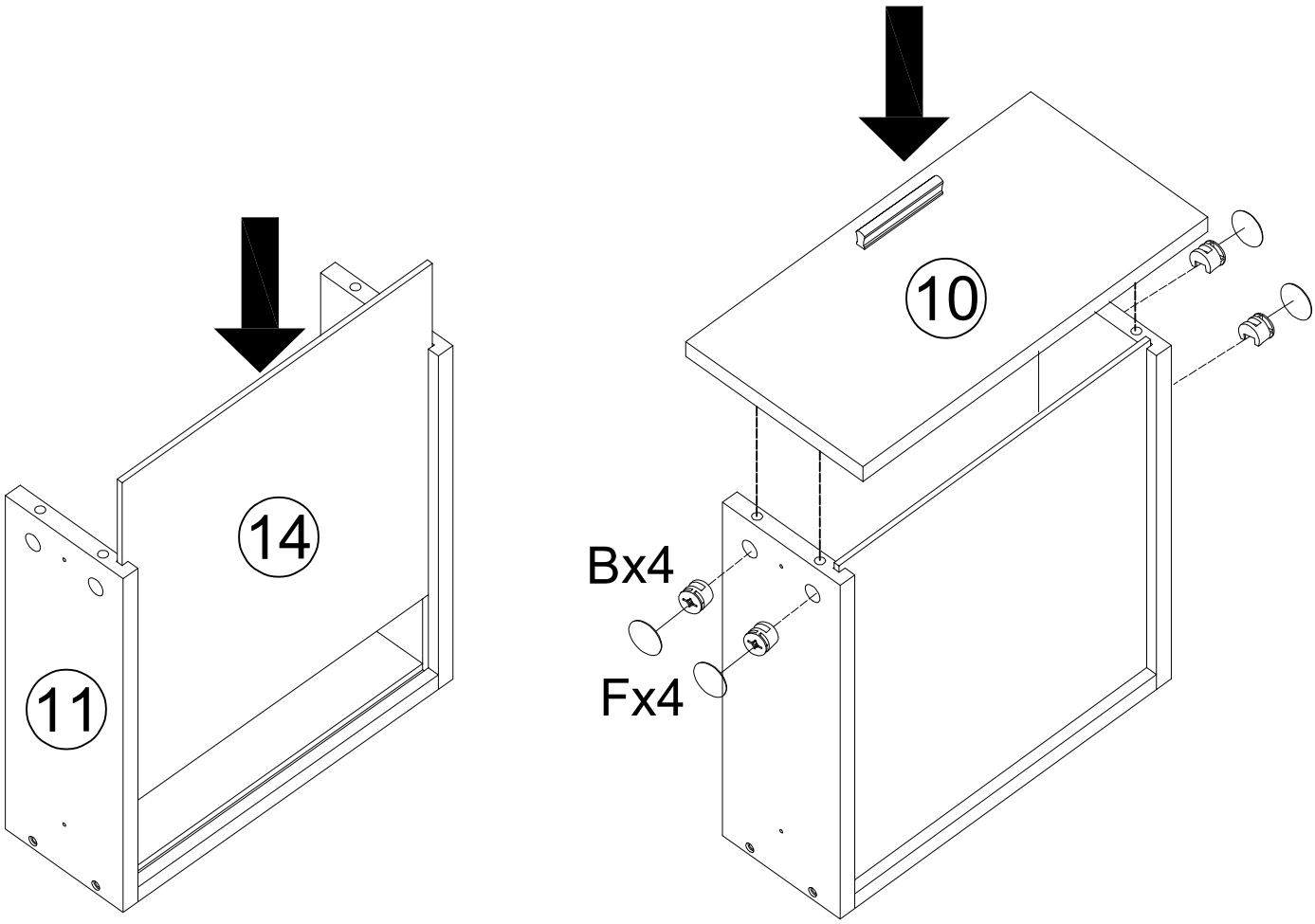

B	x4	F	x4
			
Φ15mm		Φ20mm	

ASSEMBLY INSTRUCTION

DESCRIPTION

2004OAK

Miami E**ntertain**m**ent** U**nit**

STEP14

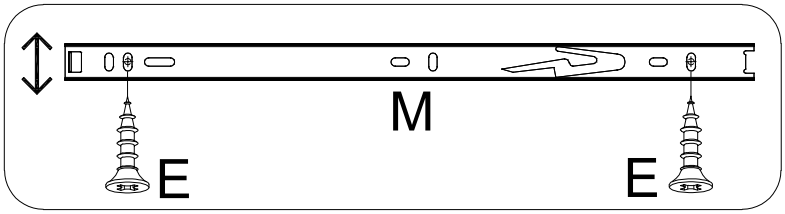

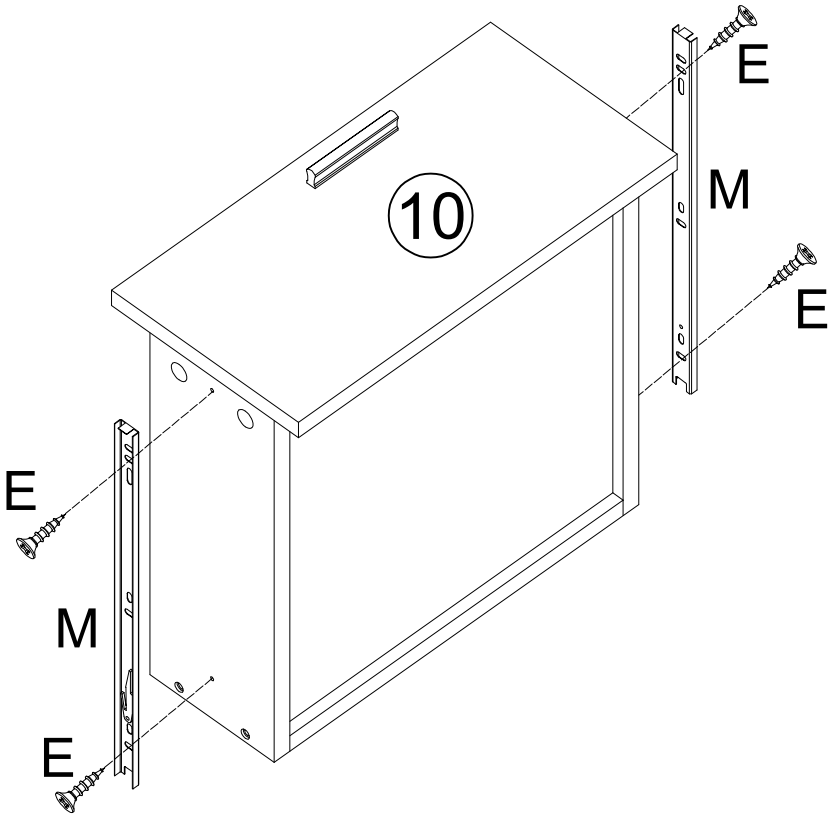

E	x4	M	x2
		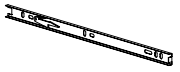	
M3.5x14mm			

ASSEMBLY INSTRUCTION

DESCRIPTION
2004 OAK
Miami Entertainment Unit

Different wall materials require different types of fixing devices. Use fixing devices suitable for the walls in your home, sold separately. Please seek professional advice if you are in doubt of what fixing should
be use..



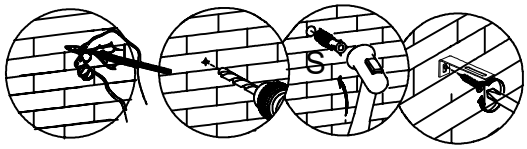

⚠ WARNING, PLEASE READ TO Reduce the risk to toppling furniture

- NEVER open more than one drawer at the time.
- NEVER allow children to stand, climb or hang on furniture. It may topple and cause serious injury or death.
- Do not place toys or other child appealing items on top of this furniture.
- ALWAYS anchor this product to a wall or other suitable surface. check anchors regularly.
- Place heavy items in lower drawers
- Use of anti toppling restraints may only reduce, but will not eliminate the risk to tip over.
- NEVER put a TV on this product.
  For more information please visit www.productsafety.gov.au

Screw and wall plugs are not provided, please use appropriate fixtures for your wall.

TIPPING RESTRAINTS KIT INSTALLATION GUIDANCE

This tipping restraint is not an earthquake restraint. If you wish to add the extra security of earthquake restraints, they must be purchased and installed separately.

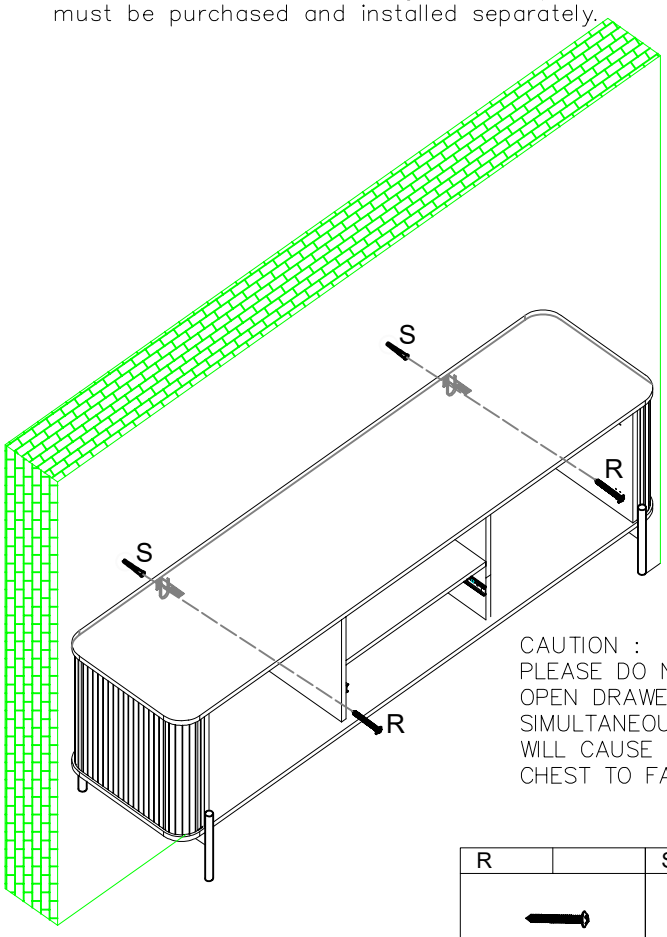

CAUTION :
PLEASE DO NOT FULLY OPEN DRAWERS SIMULTANEOUSLY AS IT WILL CAUSE THE DRAWER CHEST TO FALL DOWN.

R		S	
			
M4x35mm			

ASSEMBLY INSTRUCTION

DESCRIPTION

2004OAK

Miami E**ntertain**m**ent** U**nit**

STEP16

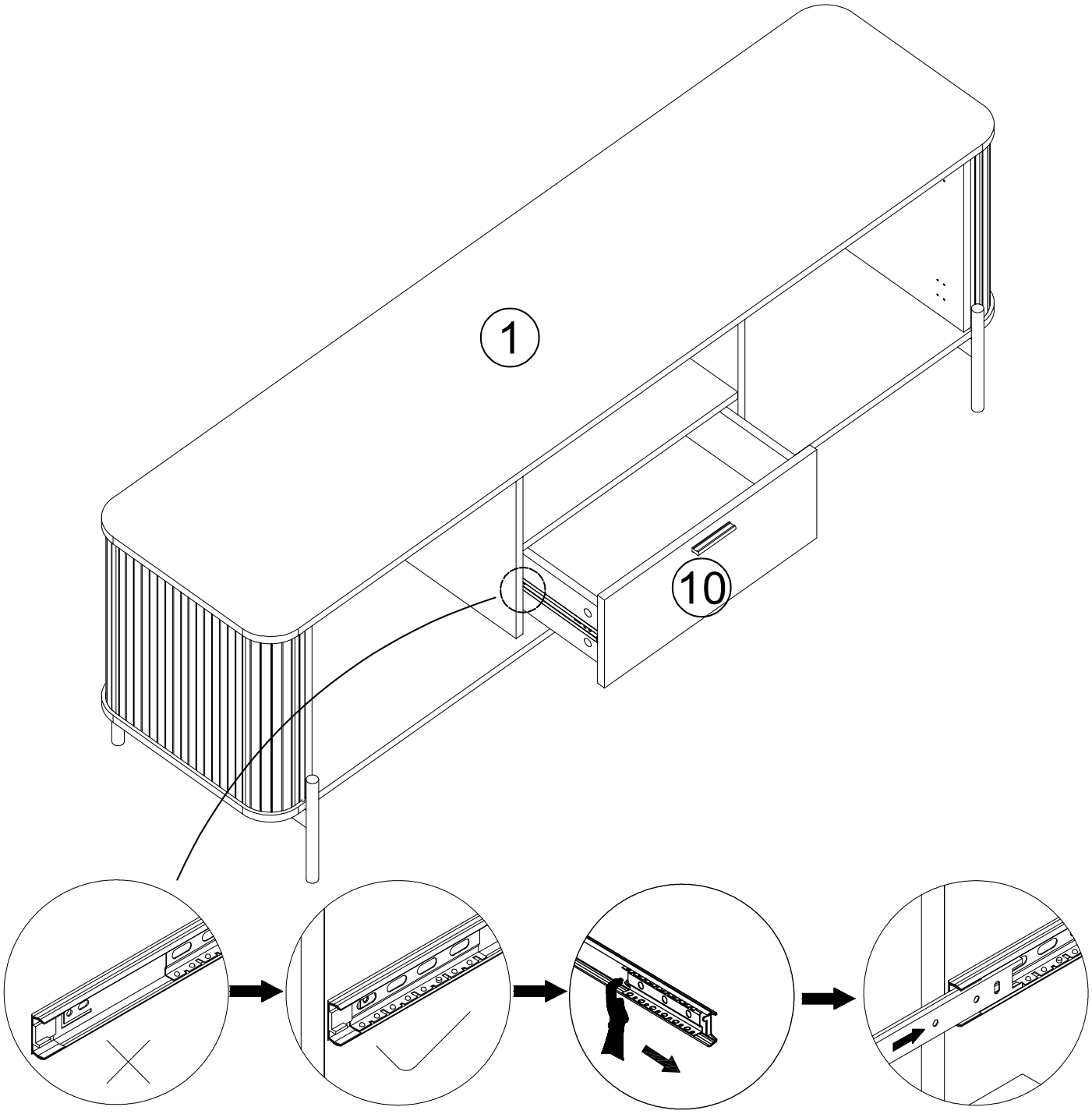

ASSEMBLY INSTRUCTION

DESCRIPTION

2004OAK

Miami E**ntertain**m**ent** U**nit**

STEP17

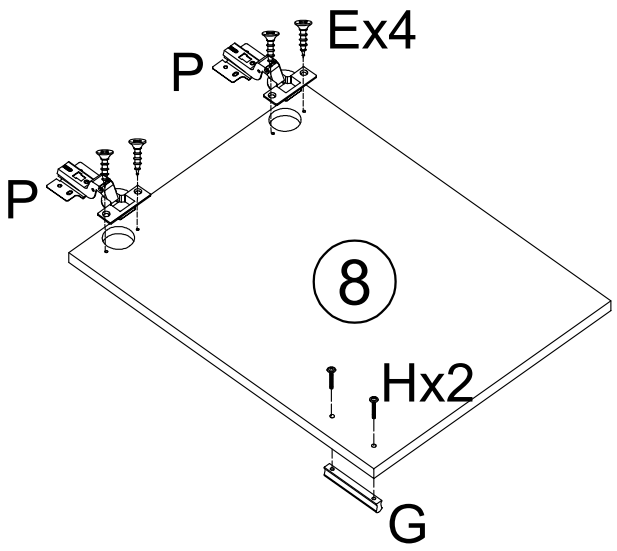

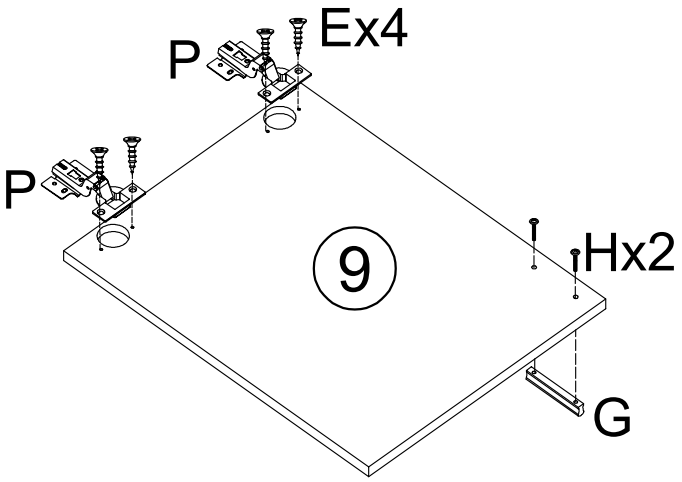

E	x8	P	x4	G	x2	H	x4
		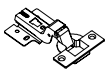					
M3.5x14mm						M4x18mm	

ASSEMBLY INSTRUCTION

DESCRIPTION

2004OAK

Miami **Entertainment Unit**

STEP18

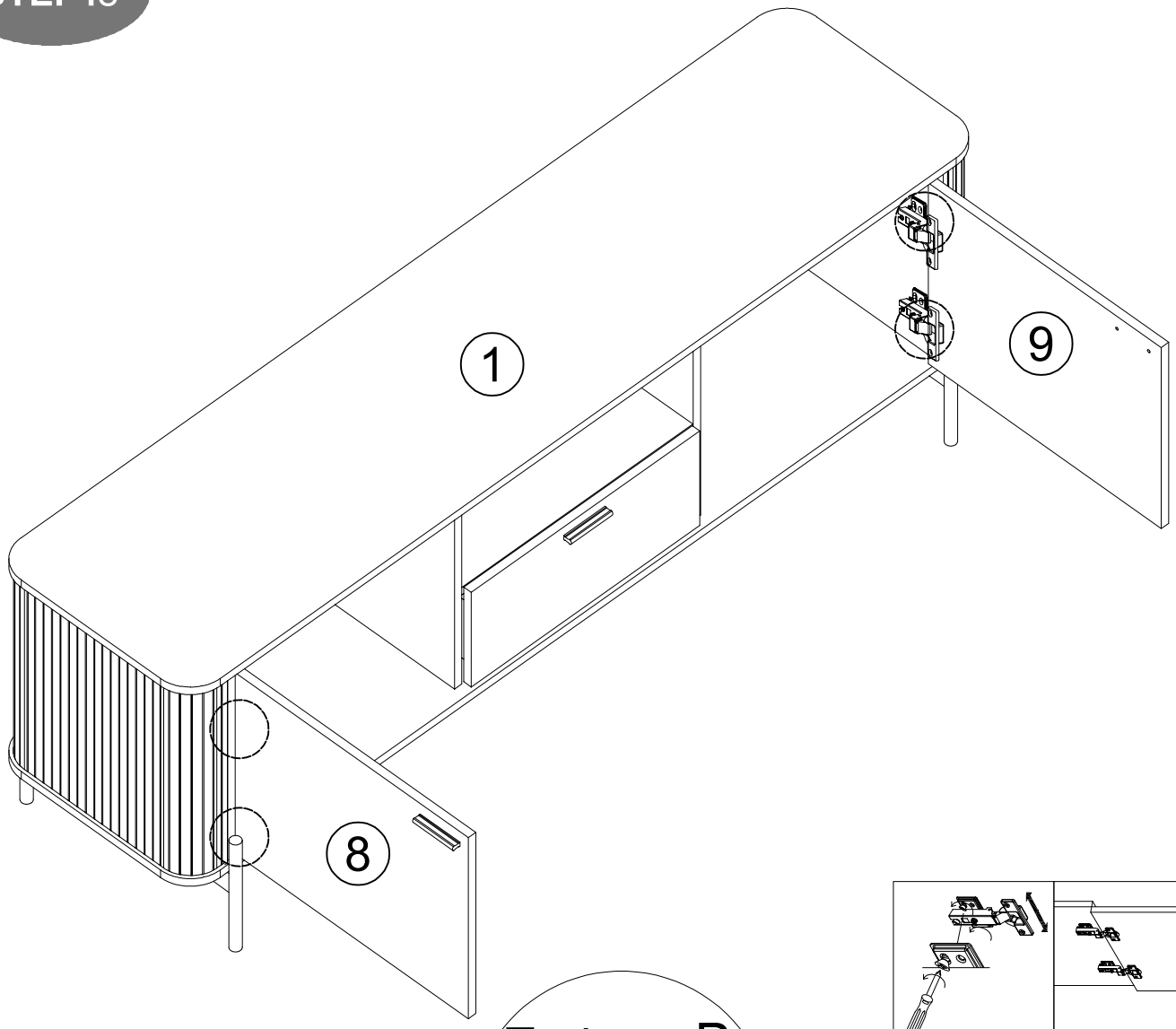

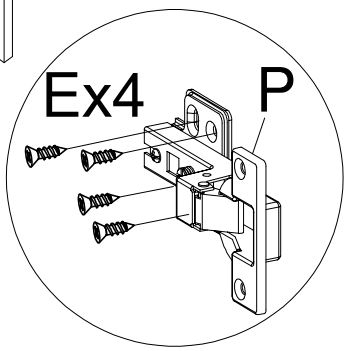

x4

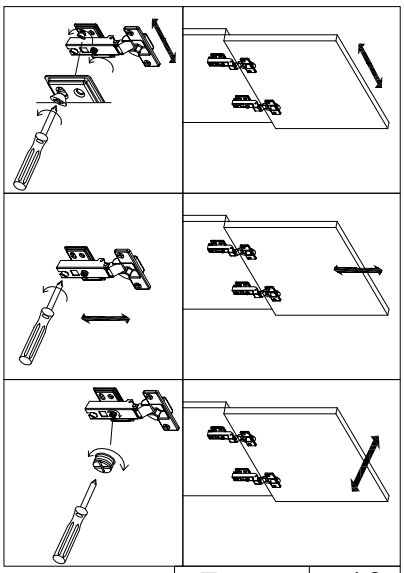

E	x16
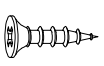	
M3.5x14mm	

ASSEMBLY INSTRUCTION

DESCRIPTION

2004OAK

Miami E**ntertainment Unit**

The Door Mounting -Concealed Hinges are Three-way Adjustable

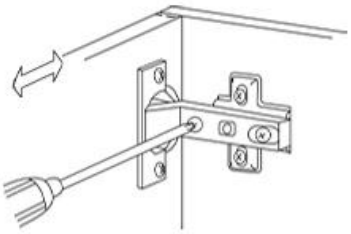

Horizontal

By screw adjustment

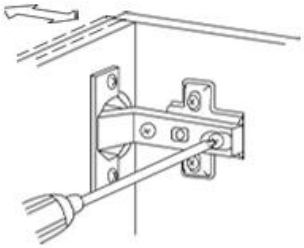

In-and-Out

By loosening the hinge-arm mounting screw or via cam adjustment

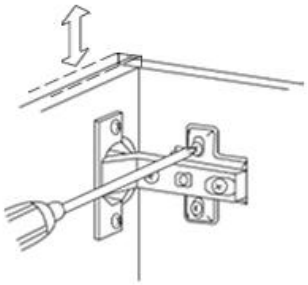

Vertical

Via slots in the mounting plate or via cam adjustment