ASSEMBLY INSTRUCTION

DESCRIPTION:
5339
HANNA LARGE SIDEBOARD

2.5 HR

APPROXIMATE ASSEMBLY TIME

2 PERSON ASSEMBLY

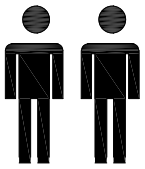

FLOOR AREA
1.4M X 2.4M

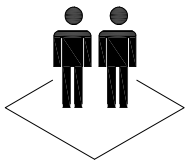

REQUIRED ASSEMBLY SPACE

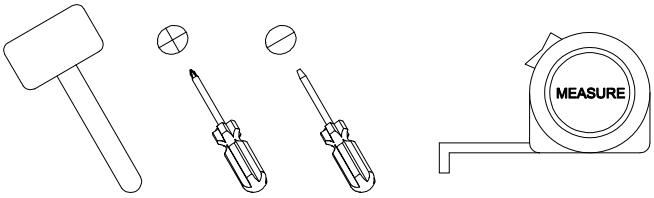

REQUIRED ASSEMBLY TOOLS (NOT PROVIDED)

ASSEMBLED DIMENSION

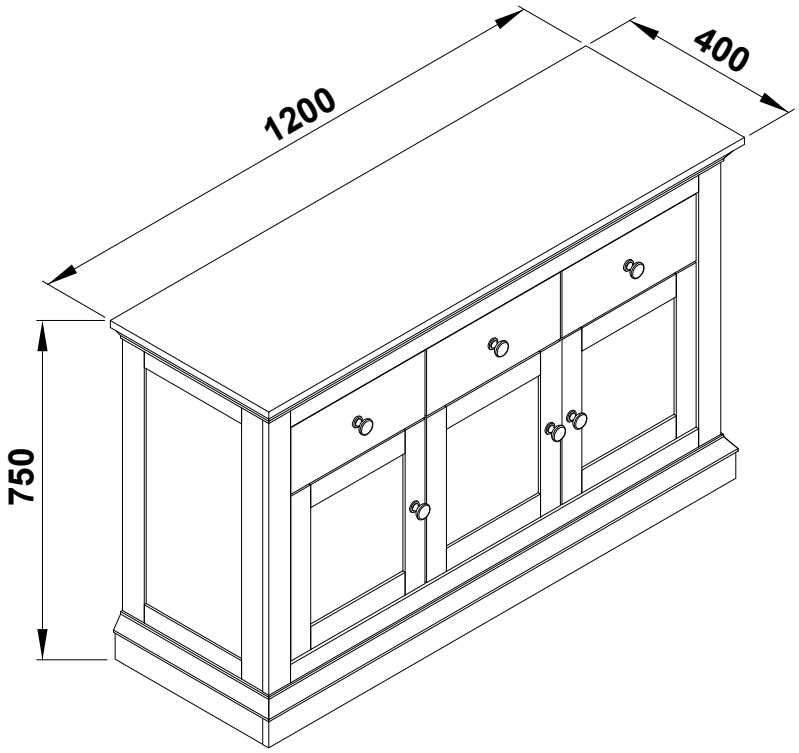

ASSEMBLY INSTRUCTION

DESCRIPTION:
5339
HANNA LARGE SIDEBOARD

WARNING : ENSURE THE WALL STRAP IS ATTACHED TO AVOID SERIOUS INJURY OR DEATH.

To avoid any serious or fatal injury, a wall strap has been provided with this product to prevent toppling. Always secure this product with an anchor device to the wall or suitable surface. Wall fixing hardware are not included since different surface materials require different attachments. Please seek professional advice if you are in doubt of what fixing device to use.

Your product has been provided with a permanent safety label that should never be removed for safety reasons.



For more information please visit www.productsafety.gov.au

ASSEMBLY INSTRUCTION

DESCRIPTION:
5339
HANNA LARGE SIDEBOARD

PART LIST

PACK 1 CONSIST OF
3, 4, 5, 6, 7, 13, 14, 23, 24.

AI AND FITTINGS

PACK 2 CONSIST OF
1, 2, 8, 9, 10, 11, 12, 15, 16, 17, 18, 19, 20, 21, 22, 25.

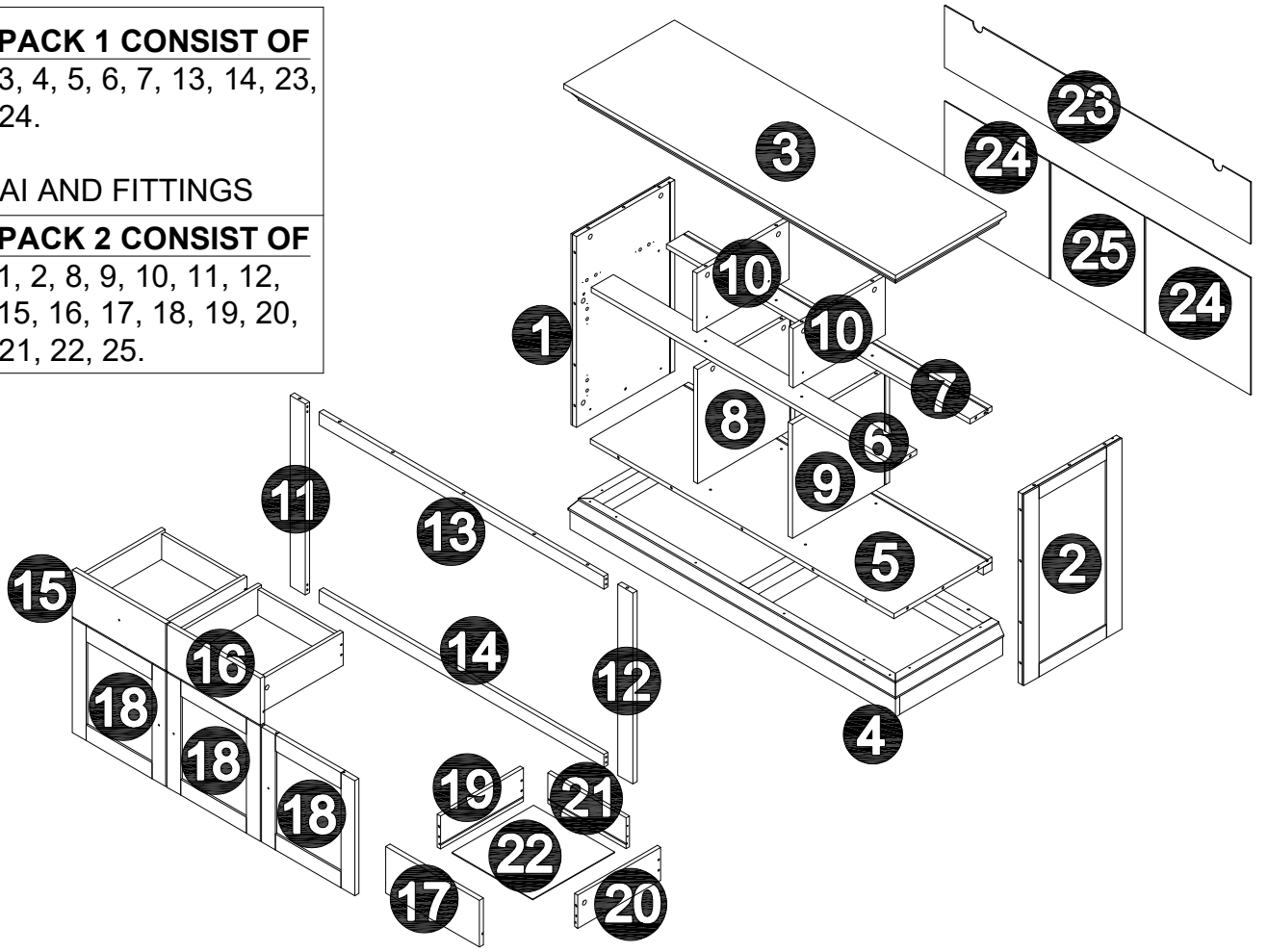

NO.	PARTS LIST	QTY	NO.	PARTS LIST	QTY
(1)	PART 1	1	(14)	PART 14	1
(2)	PART 2	1	(15)	PART 15	1
(3)	PART 3	1	(16)	PART 16	1
(4)	PART 4	1	(17)	PART 17	1
(5)	PART 5	1	(18)	PART 18	3
(6)	PART 6	1	(19)	PART 19	3
(7)	PART 7	1	(20)	PART 20	3
(8)	PART 8	1	(21)	PART 21	3
(9)	PART 9	1	(22)	PART 22	3
(10)	PART 10	2	(23)	PART 23	1
(11)	PART 11	1	(24)	PART 24	2
(12)	PART 12	1	(25)	PART 25	1
(13)	PART 13	1			

ASSEMBLY INSTRUCTION

DESCRIPTION:
5339
HANNA LARGE SIDEBOARD

HARDWARE LIST

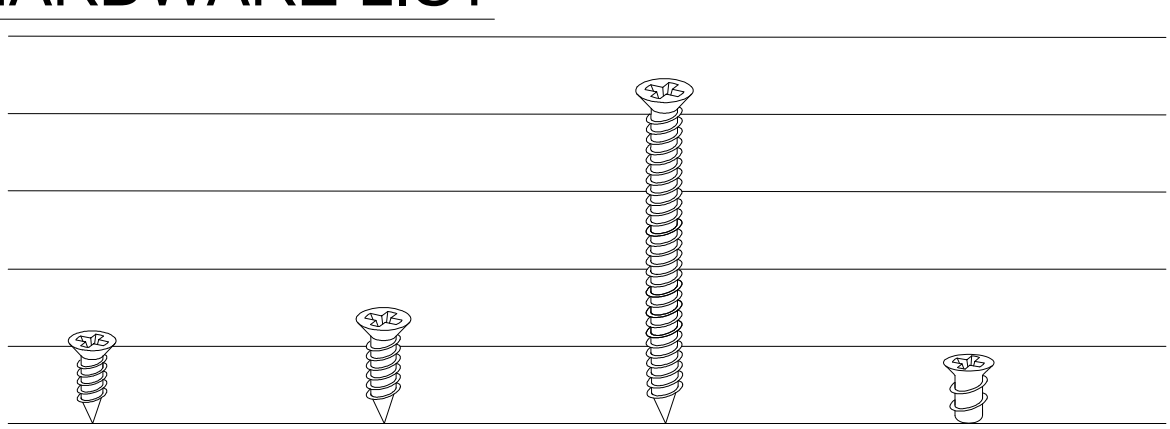

X12
M3.5 X 12MM
A
SCREW

X54
M3.5 X 15MM
B
SCREW

X10
M4.5 X 45MM
C
SCREW

X8
M6 X 9MM
D
SCREW

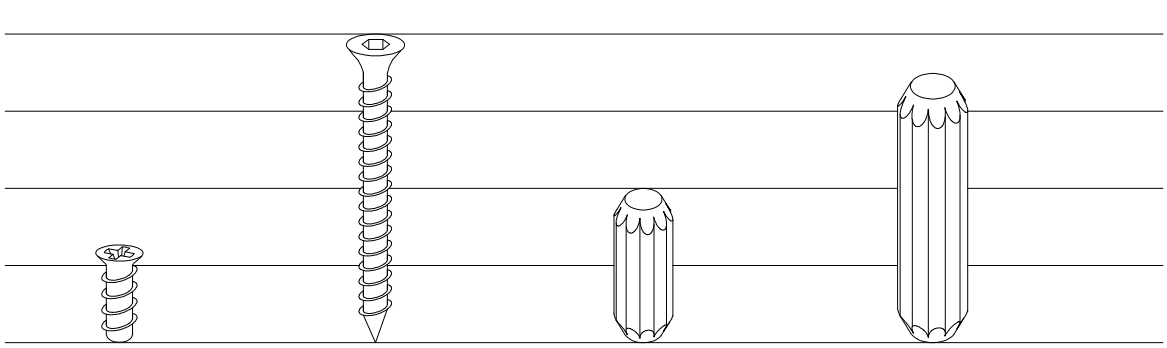

X4
M6 X 13MM
E
SCREW

X20
M6 X 40MM
F
SCREW

X6
Ø6 X 20MM
G
WOOD DOWEL

X8
Ø6 X 35MM
H
WOOD DOWEL

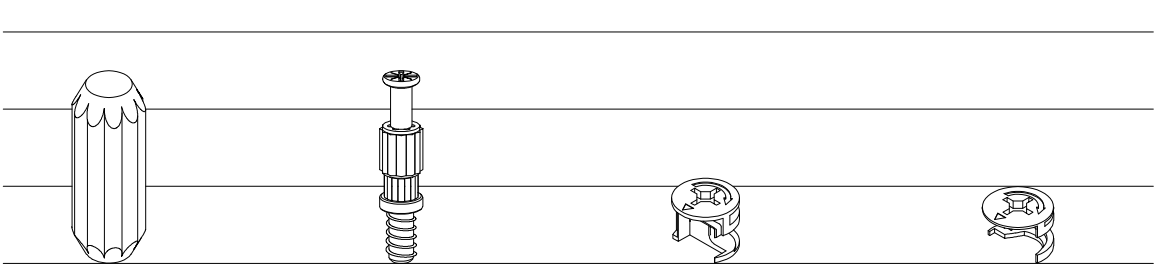

X26
Ø8 X 25MM
J
WOOD DOWEL

X34
20 X 5MM
K
BOLT DOWEL

X28
Ø15 X 12MM
L
CAM

X6
Ø15 X 9MM
M
CAM

ASSEMBLY INSTRUCTION	DESCRIPTION: 5339 HANNA LARGE SIDEBOARD

HARDWARE LIST



X4

N

WASHER (M5)

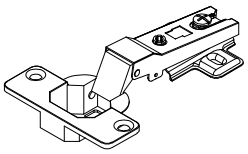

X2 SETS

P

METAL HINGES (2/8") W/ SPRING

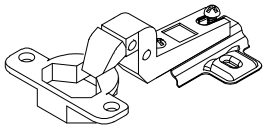

X4 SETS

Q

METAL HINGES (7/8") W/ SPRING



X6 SETS

R

METAL KNOB 702-2=(1 PC)WITH SCREW (MC4 X 22MM)

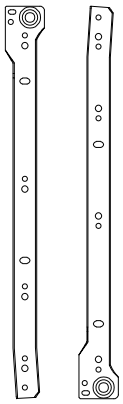

X3 SETS

S1 & S2

METAL DRAWER SLIDE (300MM)

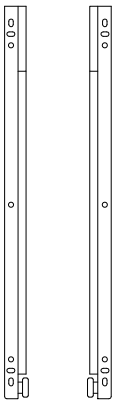

X3 SETS

T1 & T2

METAL DRAWER SLIDE (300MM)

ASSEMBLY INSTRUCTION	DESCRIPTION: 5339 HANNA LARGE SIDEBOARD

HARDWARE LIST

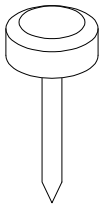

X6

U

PLASTIC LEG STUD

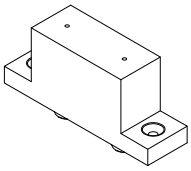

X8

V

PVC BLOCK (SLIDE)
H35MM X L80MM BLACK

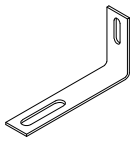

X2

W

STEEL L BRACKET (BZ)
1.5 X 76.5

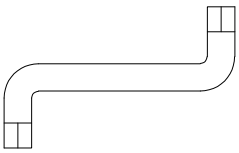

X1

X

ALLEN KEY

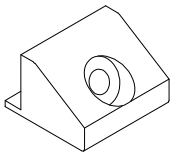

X12

Y

BACKPLY STOPPER

ASSEMBLY INSTRUCTION	DESCRIPTION: 5339 HANNA LARGE SIDEBOARD

Top Tips before you start!

1. Please check that all parts are present before you start the assembly of your furniture, as once assembled, the furniture is exempt from our home approval policy.

2. For ease and speed of assembly, we recommend that before you commence each step of the assembly, that you identify all the parts required for the step.

3. For larger items, please ensure that you have sufficient space and people (as indicated on page 1) to assemble your product safely.

4. We recommend that, where possible, all items are assembled near to the area in which they will be placed in use, to avoid moving the product unnecessarily once assembled.

5. For the protection of your furniture, particularly items of high gloss finish, we recommend that the product is placed on a protected surface during assembly to prevent any damage.

6. During assembly please take care not to over-tighten any fittings, as this may damage the product.

Care and Maintenance of your Furniture

- Please periodically check all fittings and re-tighten as necessary.
- Please do not drag or pull your furniture.
- Wipe occasionally with a soft cloth slightly dampened with water. Then buff with a dry clean soft cloth.
- Never allow any kind of liquid to remain on your furniture. Absorption can cause wood to warp or finishes to de-laminate.
- Please do not sit or stand on this item.

Special Tips for Fitting Minifix Cam (Cam-Lock), and Minifix Bolt (Cam-Bolts)

CAM-BOLT

Tighten until shoulder is flush with panel. Do not overtighten or undertighten (see example below).

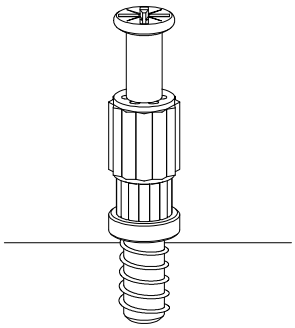

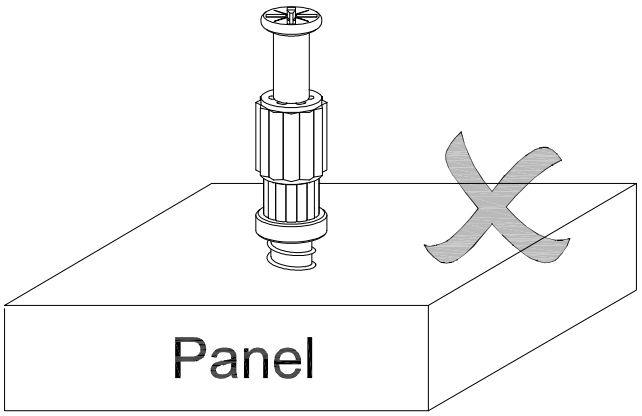

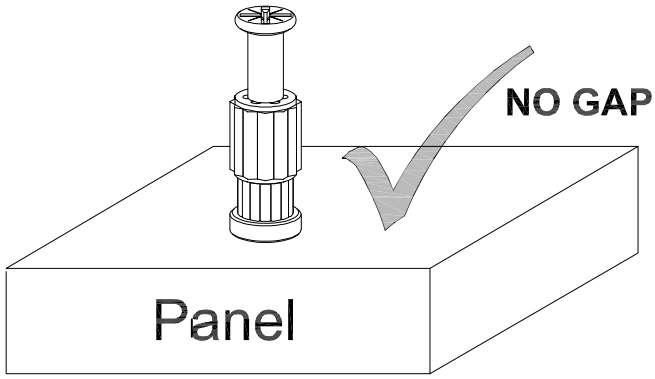

CAM-LOCK

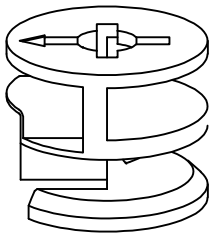

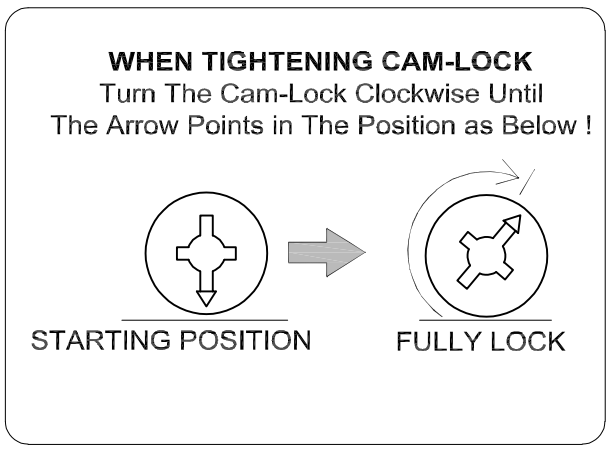

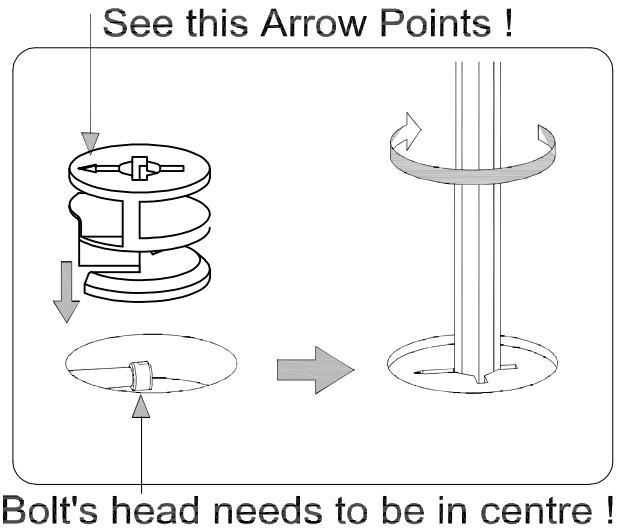

Special Tips for Fitting Drawer Runner A&B

DRAWER RUNNER - A

Fix the first screw as per pointed hole on the front side of runners and fix second screw accordingly following the holes on panel.

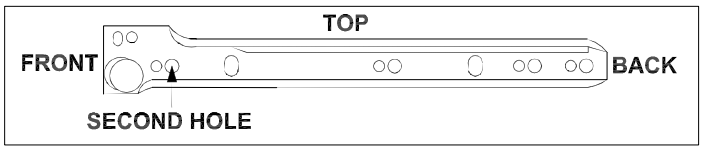

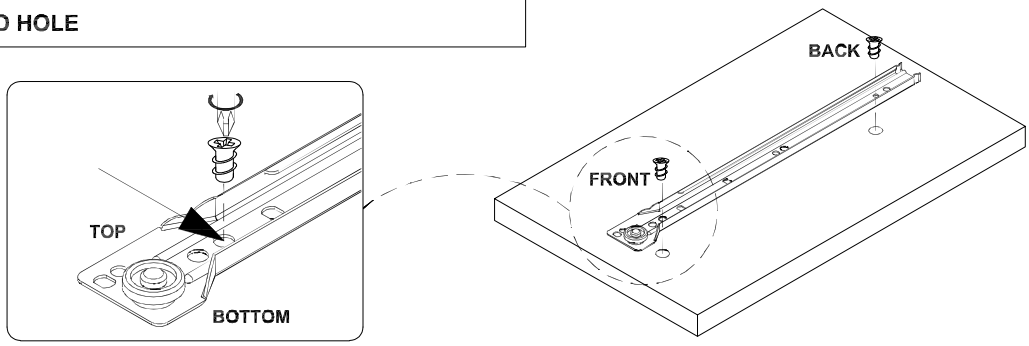

DRAWER RUNNER - B

Runners must be pushed up against drawer front before securely tightened the screw on the pointed holes.

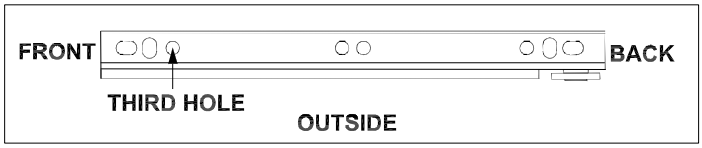

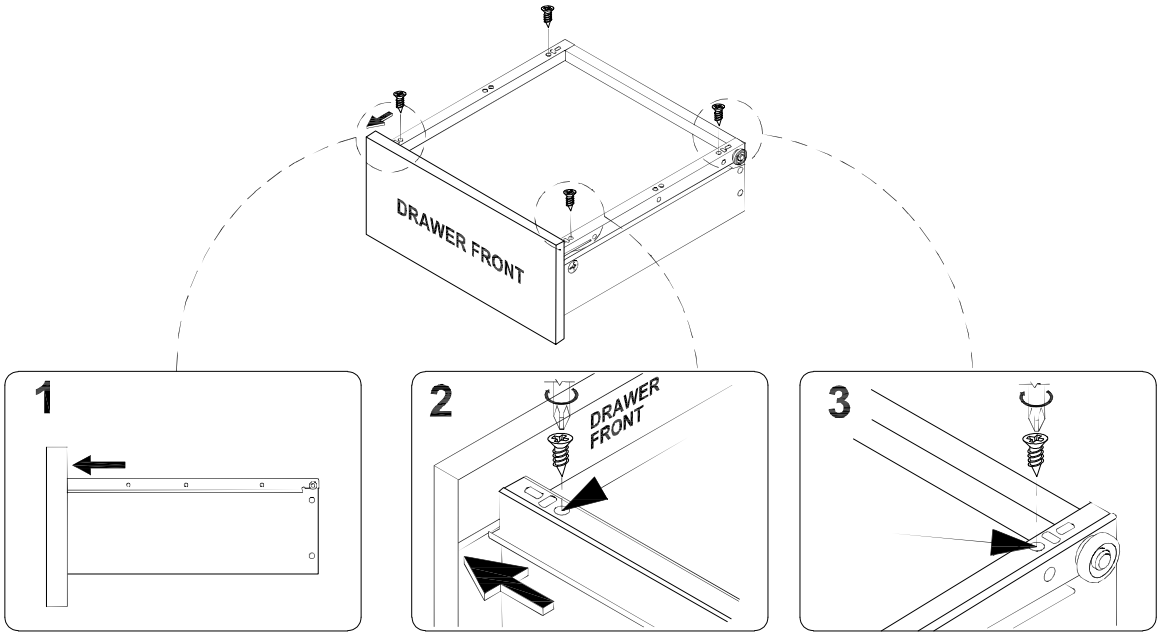

ASSEMBLY INSTRUCTION

DESCRIPTION:
5339
HANNA LARGE SIDEBOARD

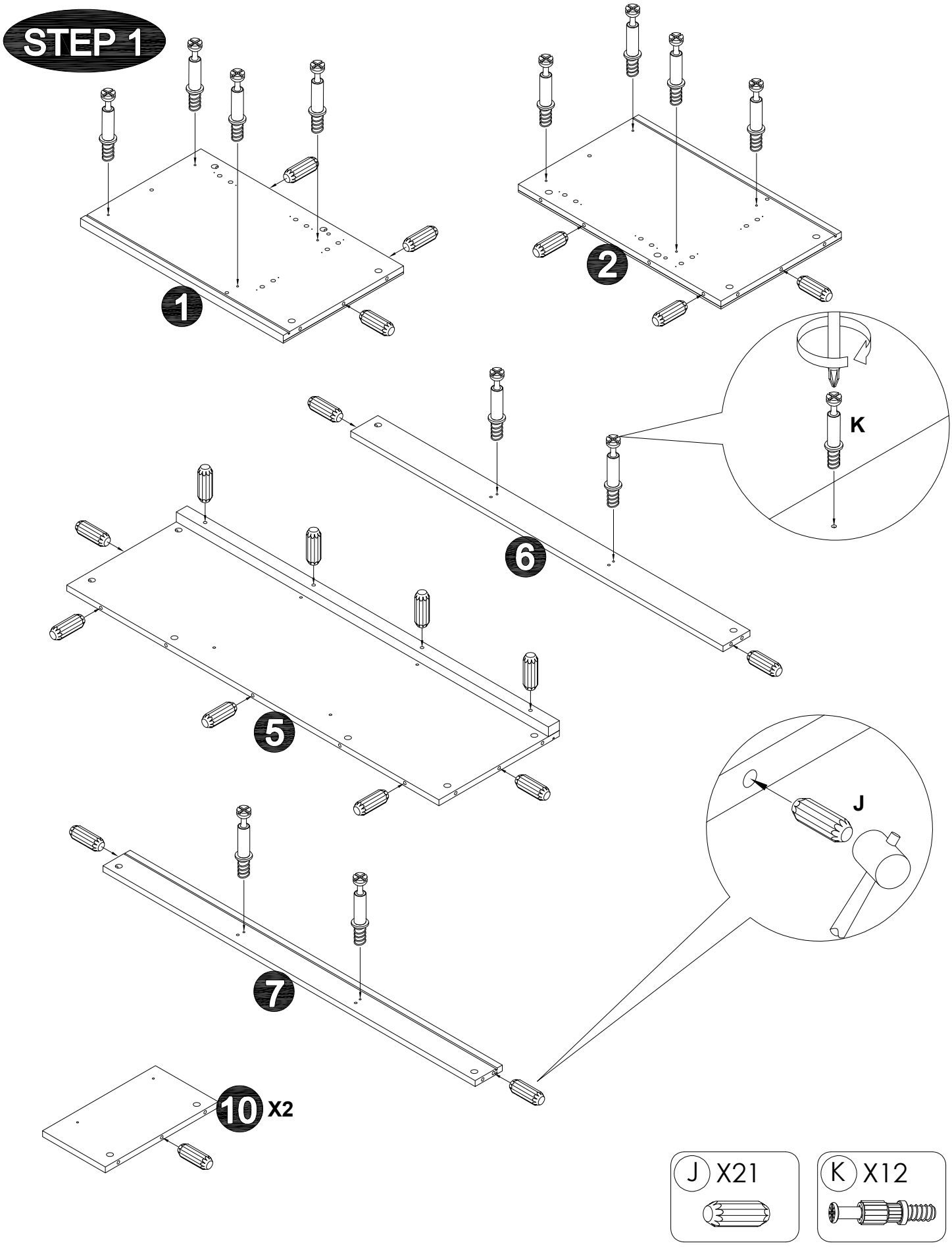

ASSEMBLY INSTRUCTION

DESCRIPTION:
5339
HANNA LARGE SIDEBOARD

STEP 2

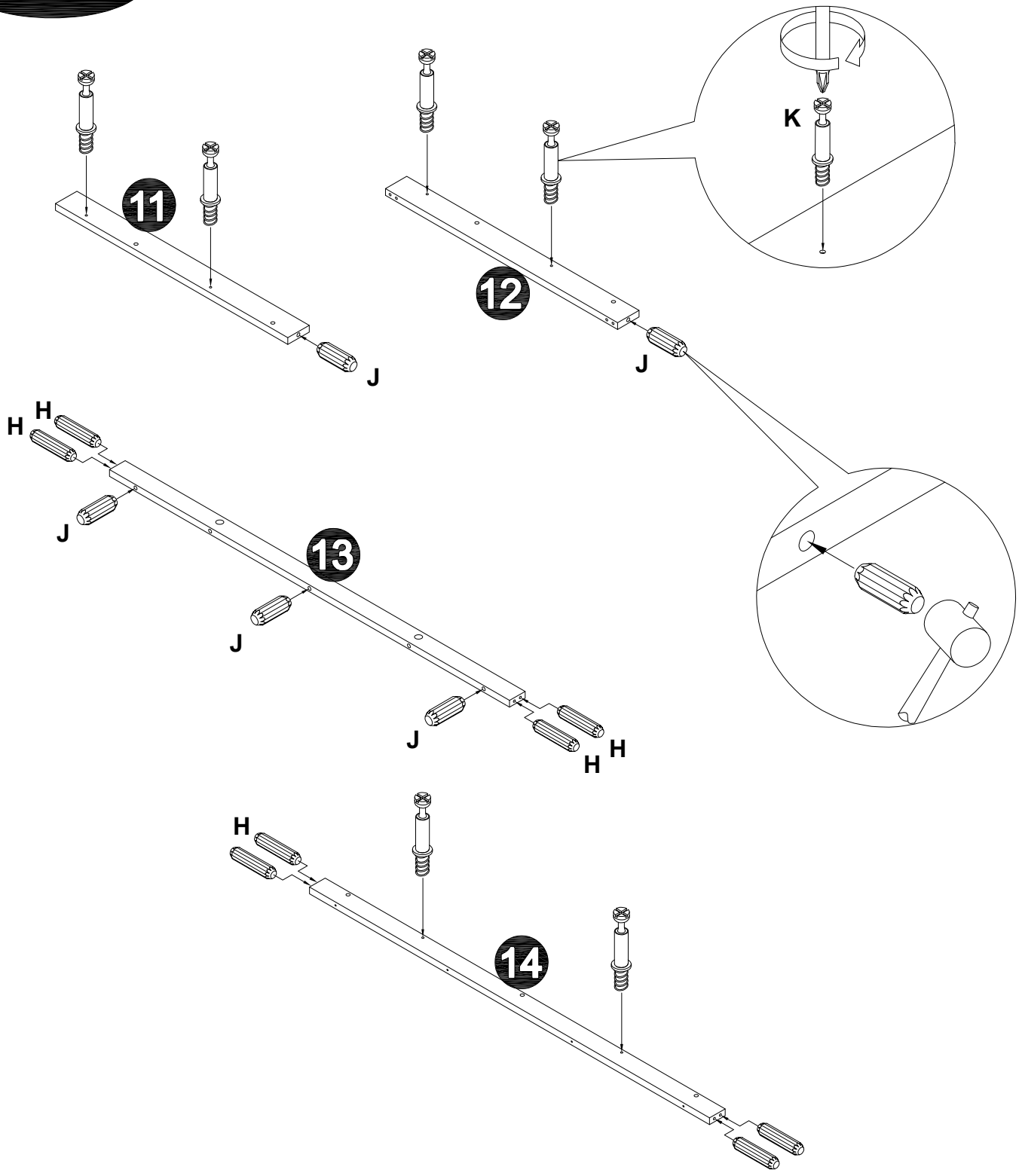

H X8

J X5

K X12

ASSEMBLY INSTRUCTION

DESCRIPTION:
5339
HANNA LARGE SIDEBOARD

STEP 3

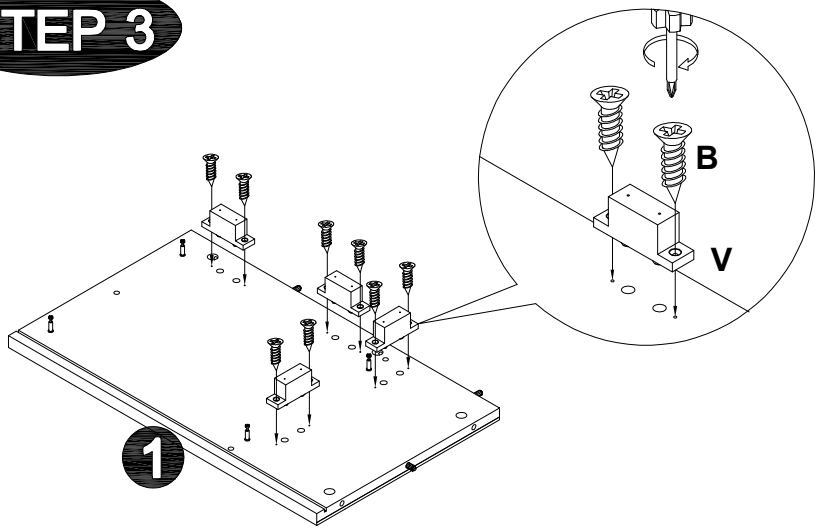

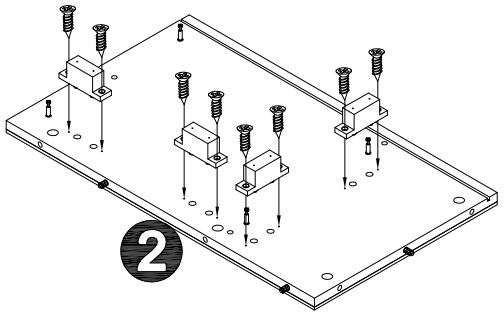

B X16



V X8

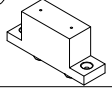

STEP 4

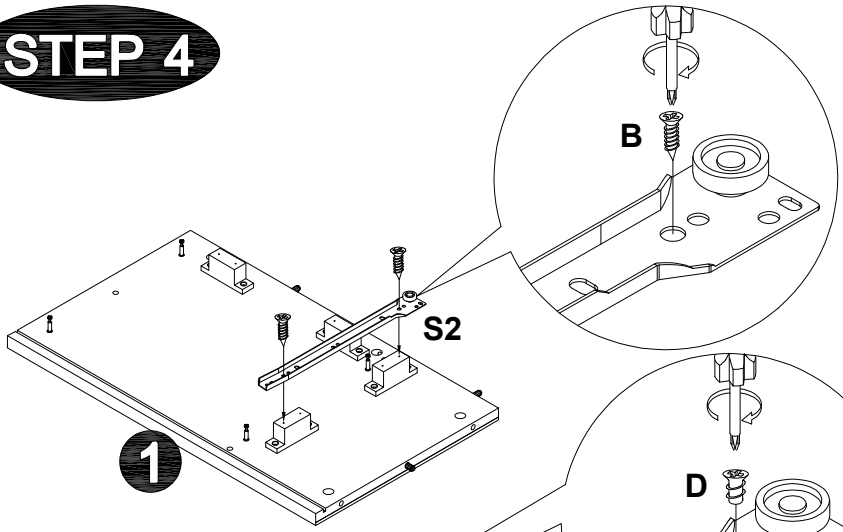

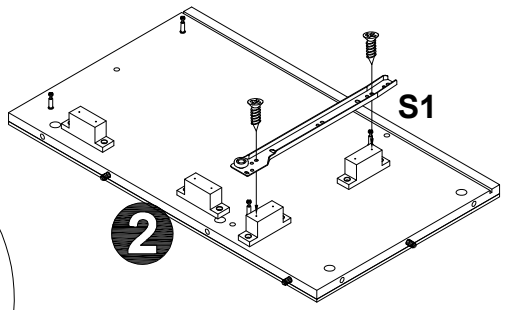

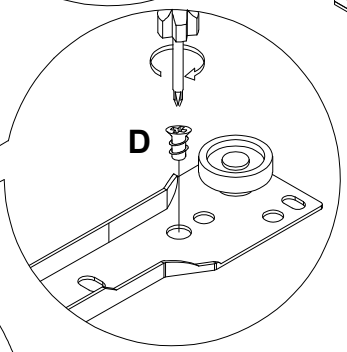

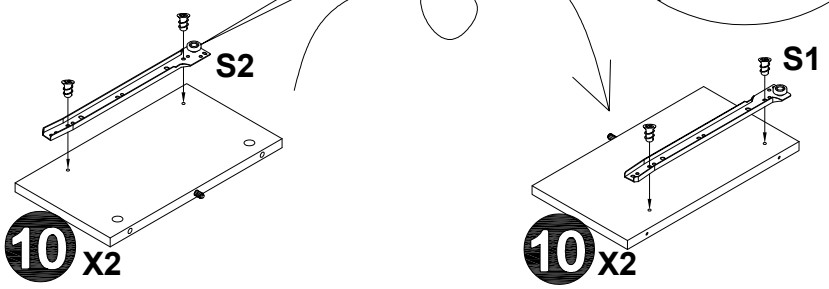

B X4



D X8



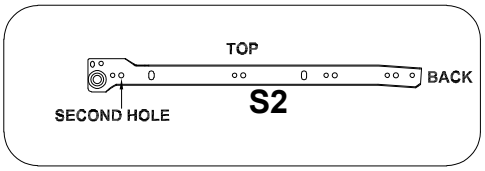

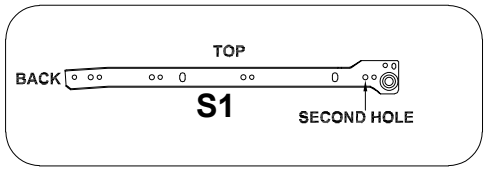

S1 X3

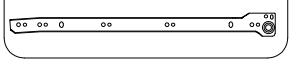

S2 X3

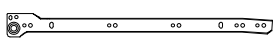

PLEASE ENSURE TO FIX THE SCREWS AS PER POINTED FRONT HOLES INSTRUCTION TO AVOID DISTORTION OF OVERALL LOOK OF PRODUCTS. AND FIND THE BACK HOLES ACCORDINGLY

ASSEMBLY INSTRUCTION

DESCRIPTION:
5339
HANNA LARGE SIDEBOARD

STEP 5

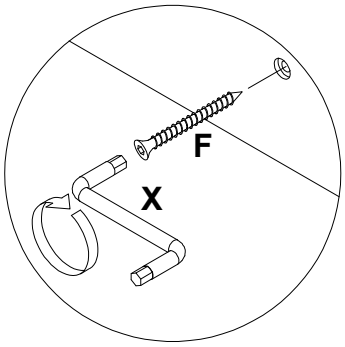

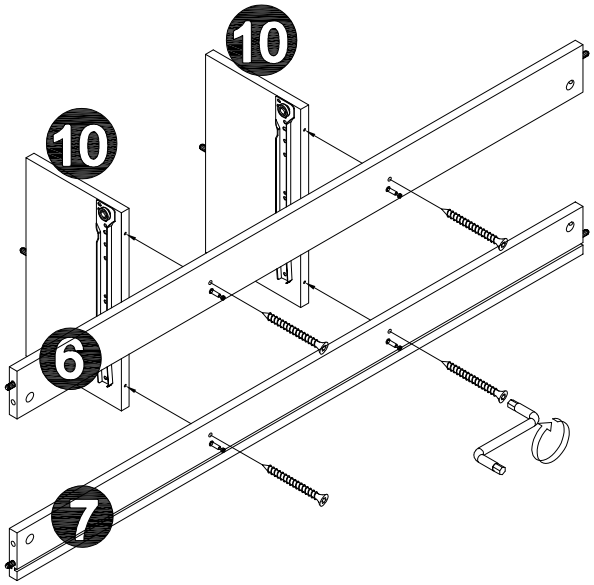

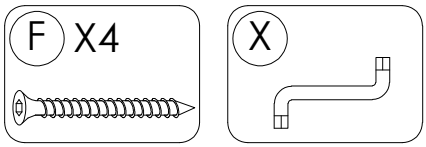

STEP 6

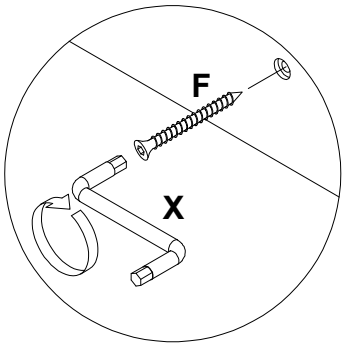

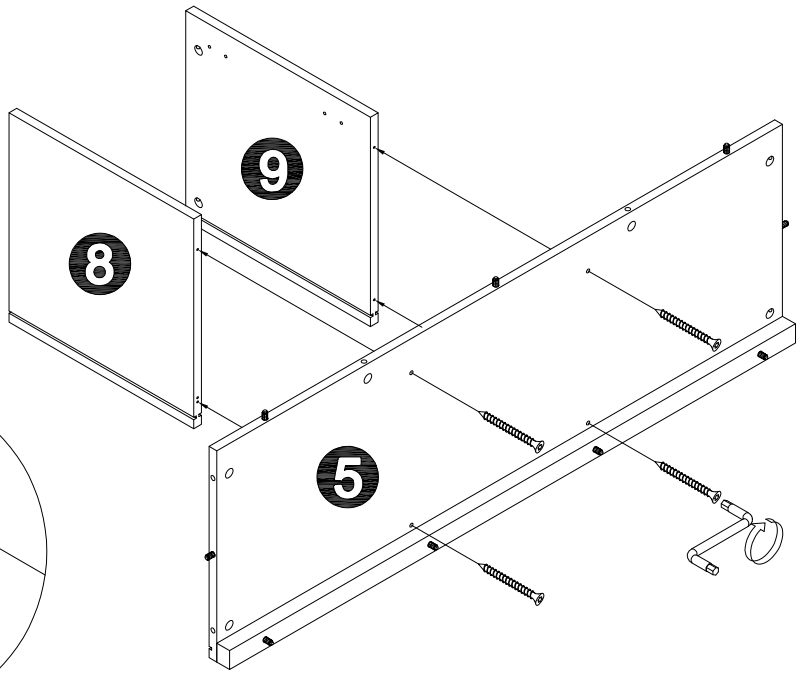

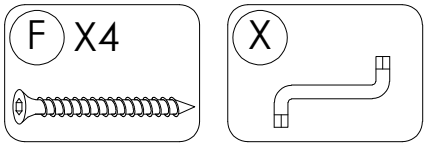

ASSEMBLY INSTRUCTION

DESCRIPTION:
5339
HANNA LARGE SIDEBOARD

STEP 7

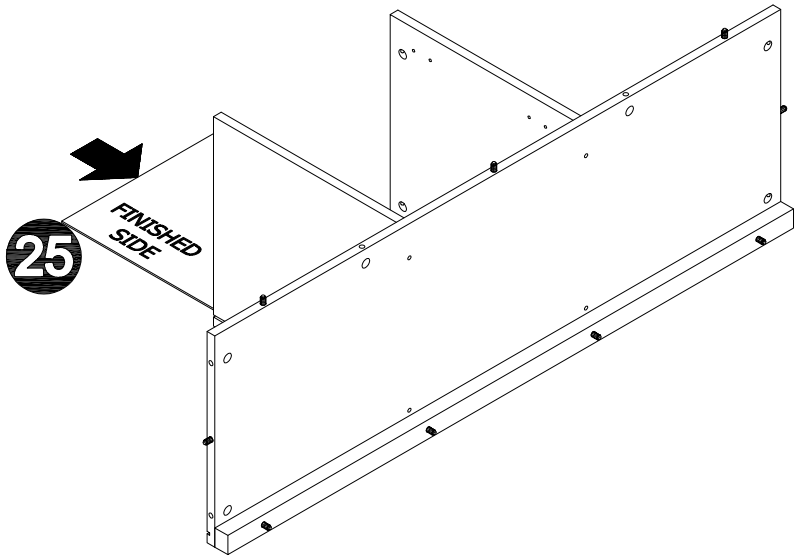

STEP 8

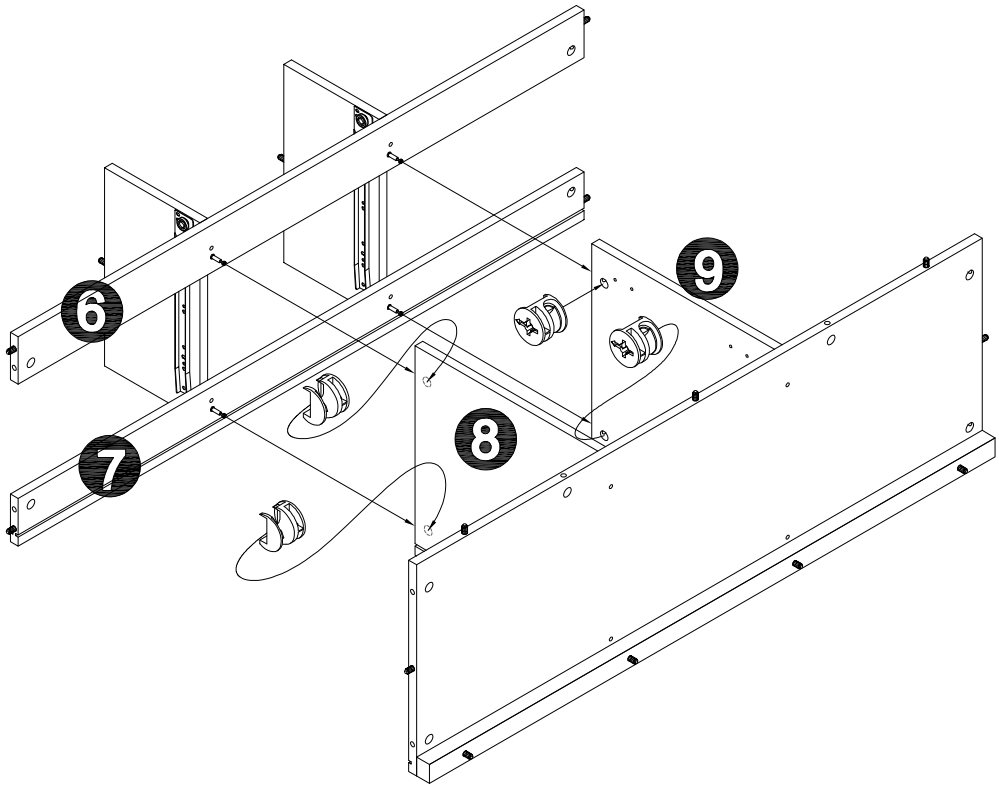

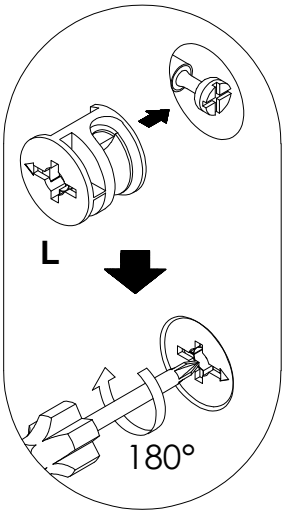

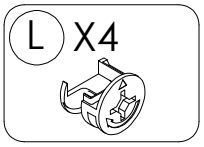

ASSEMBLY INSTRUCTION

DESCRIPTION:
5339
HANNA LARGE SIDEBOARD

STEP 9

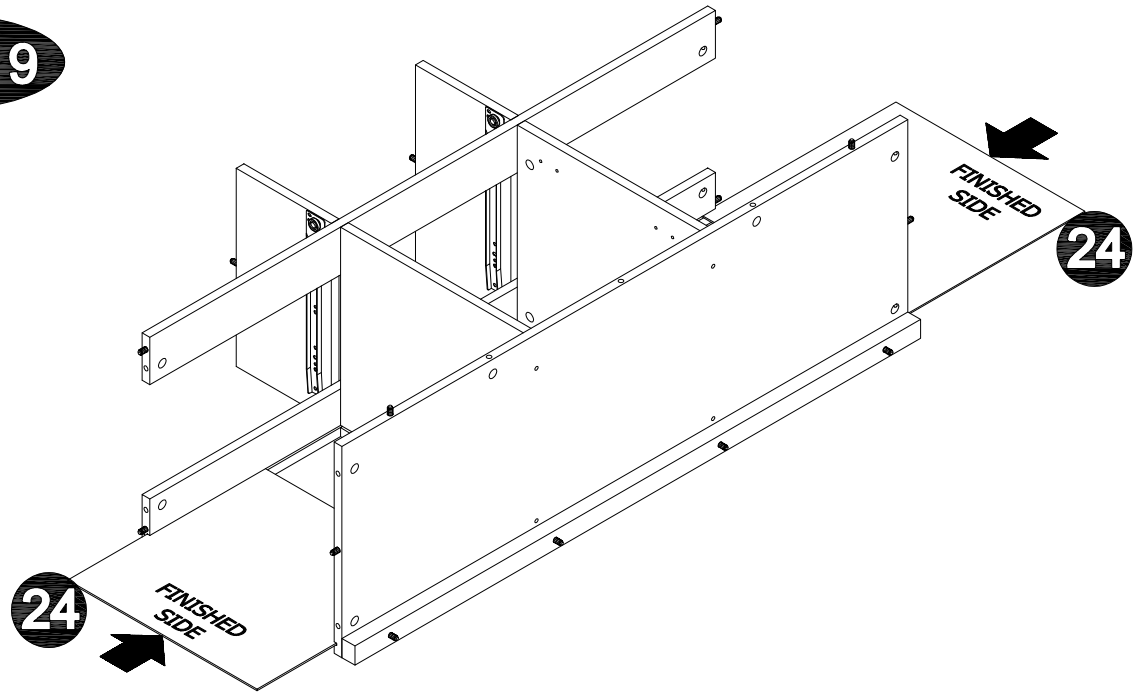

STEP 10

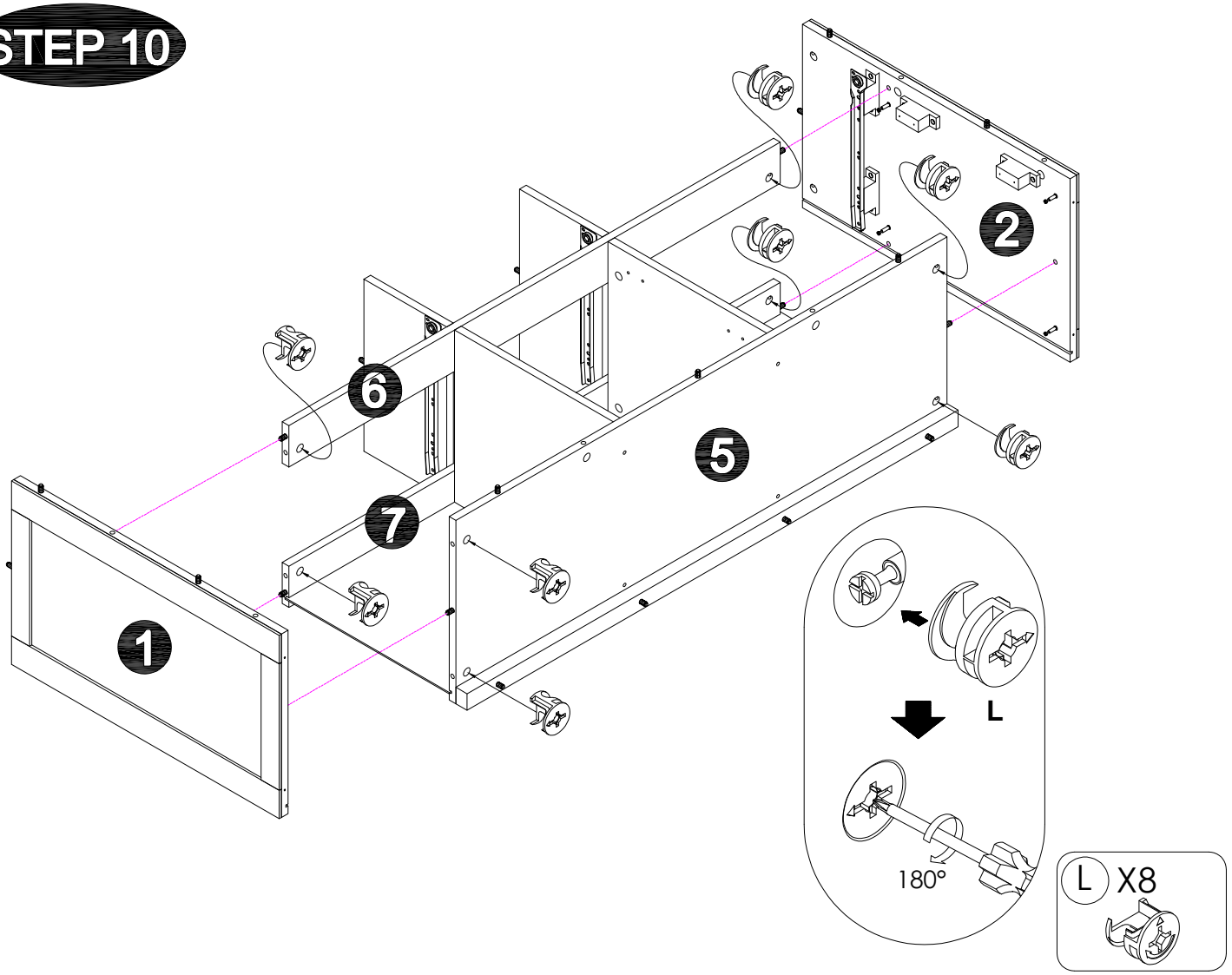

ASSEMBLY INSTRUCTION

DESCRIPTION:
5339
HANNA LARGE SIDEBOARD

STEP 11

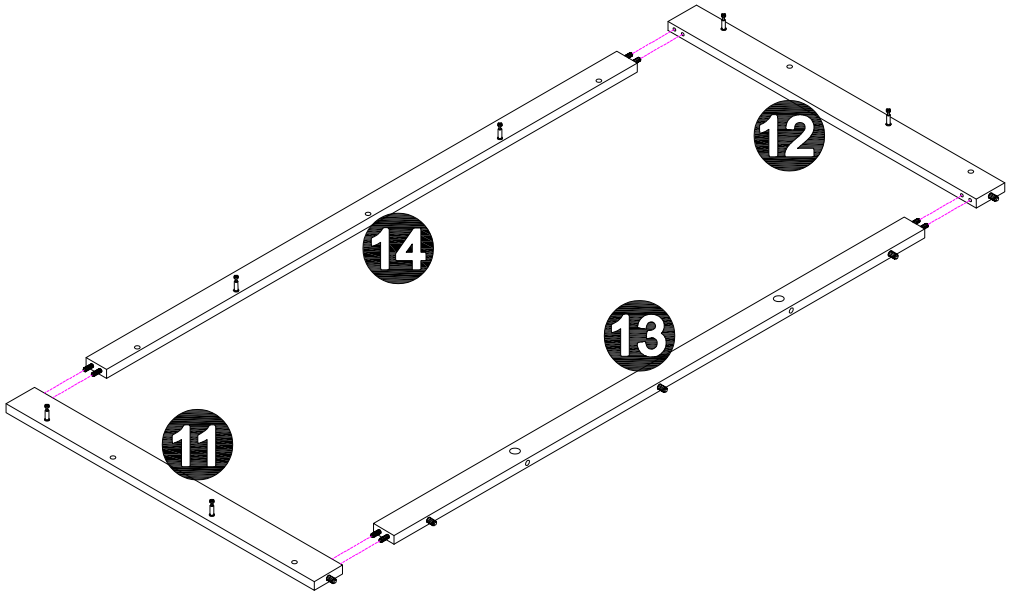

ASSEMBLY INSTRUCTION

DESCRIPTION:
5339
HANNA LARGE SIDEBOARD

STEP 12

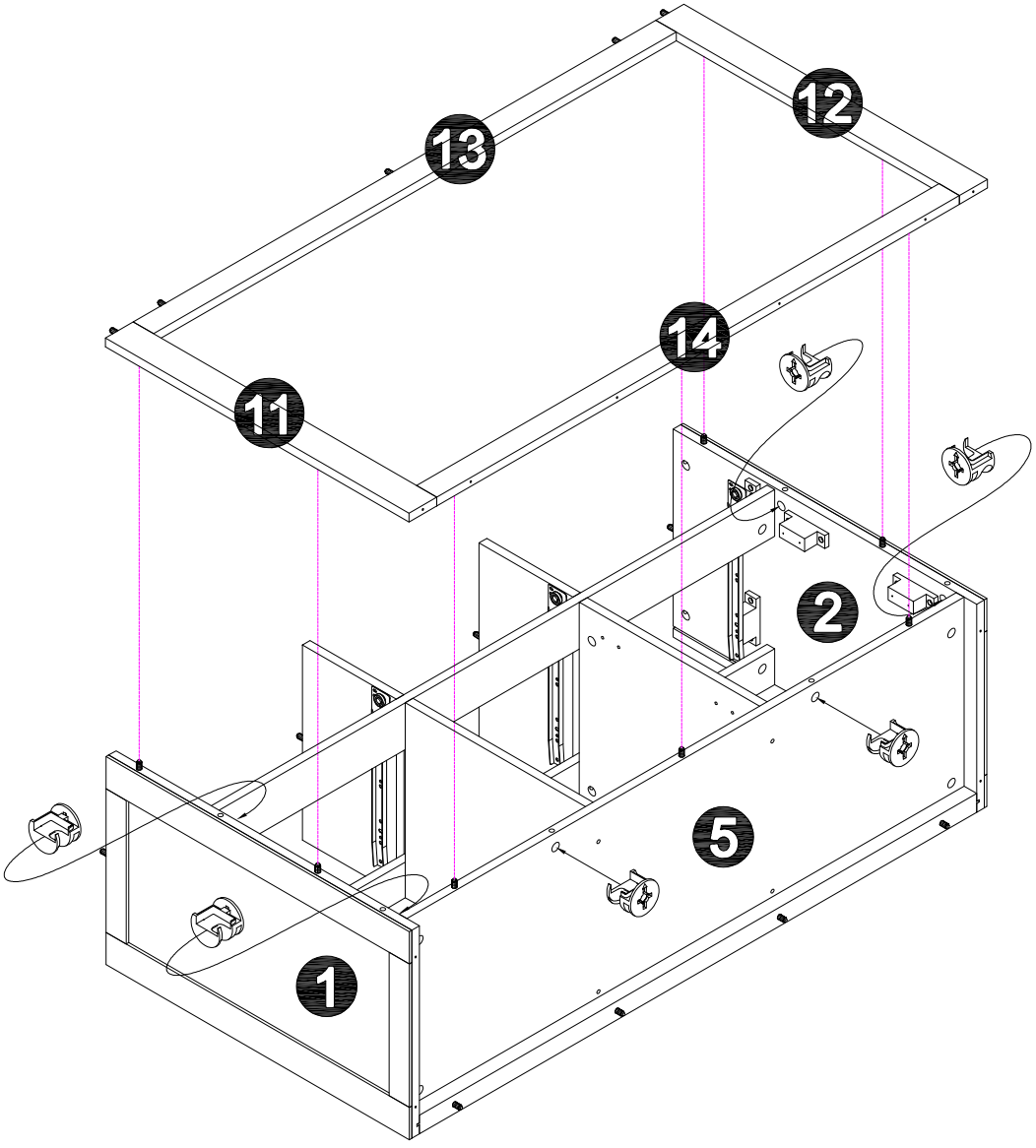

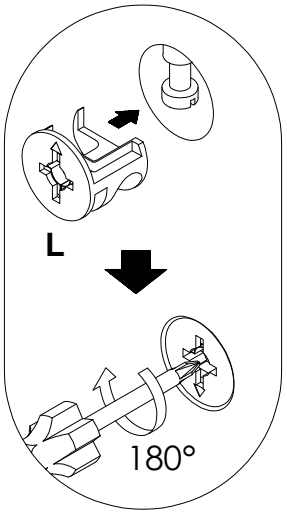

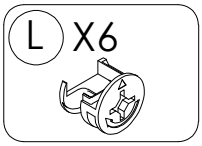

ASSEMBLY INSTRUCTION

DESCRIPTION:
5339
HANNA LARGE SIDEBOARD

STEP 13

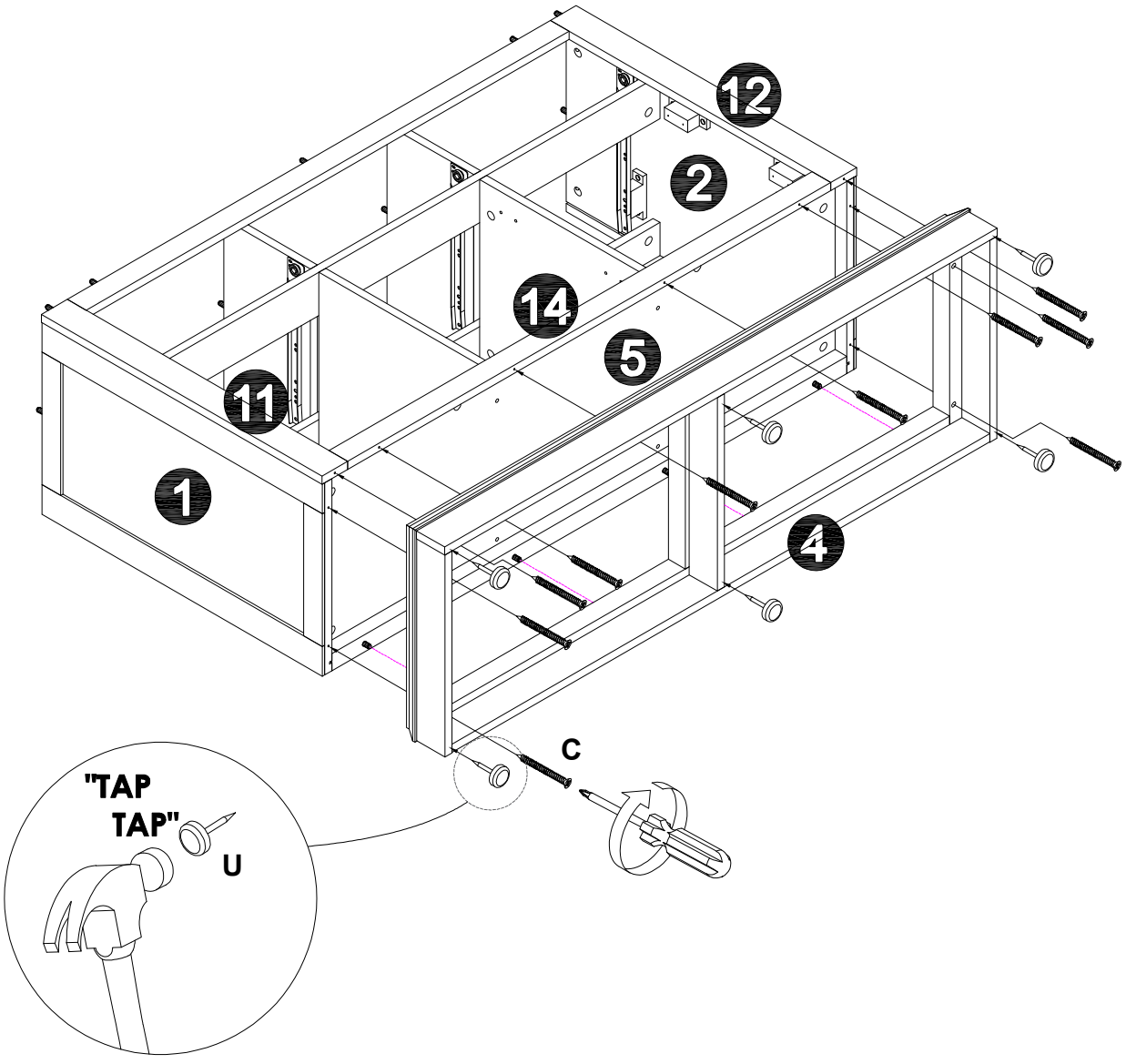

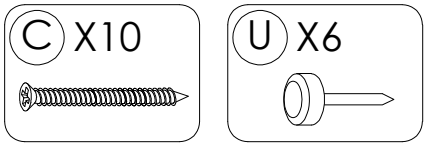

ASSEMBLY INSTRUCTION

DESCRIPTION:
5339
HANNA LARGE SIDEBOARD

STEP 14

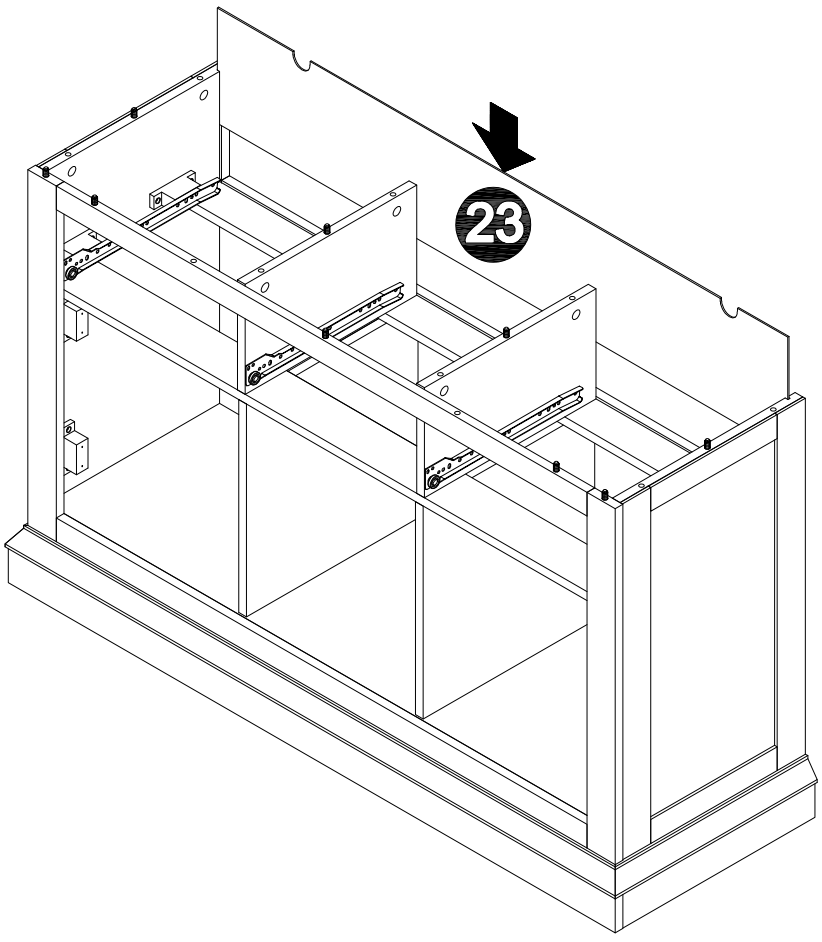

ASSEMBLY INSTRUCTION

DESCRIPTION:
5339
HANNA LARGE SIDEBOARD

STEP 15

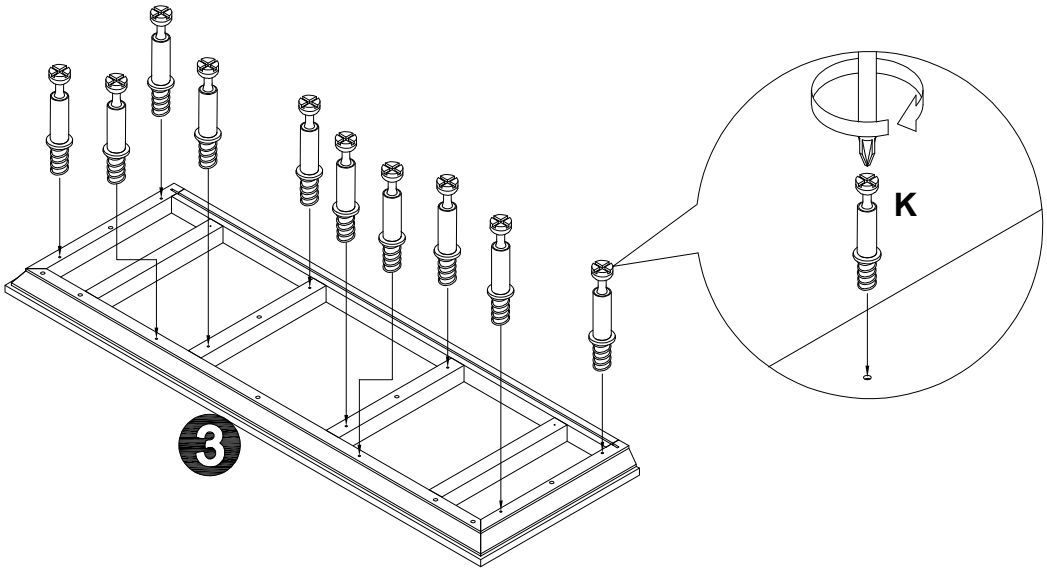

K X10

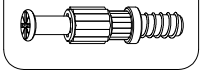

STEP 16

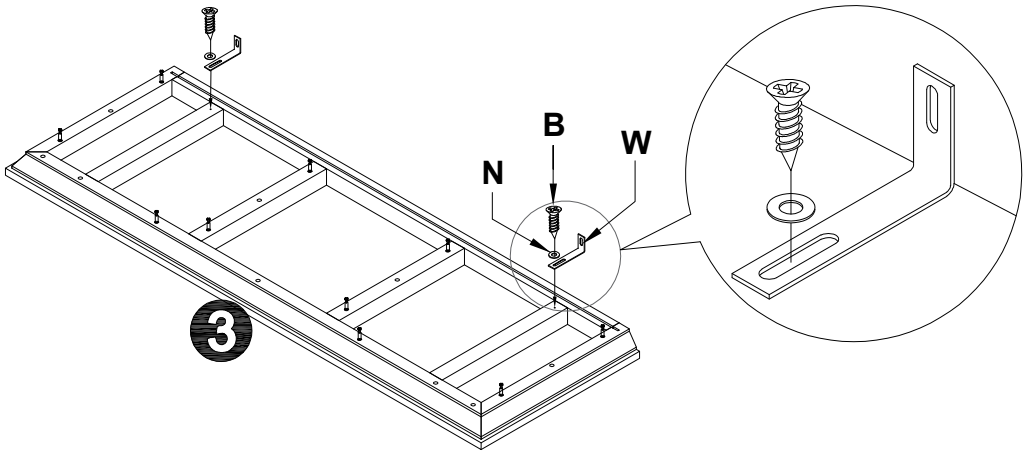

B X2



N X2



W X2



ASSEMBLY INSTRUCTION

DESCRIPTION:
5339
HANNA LARGE SIDEBOARD

STEP 17

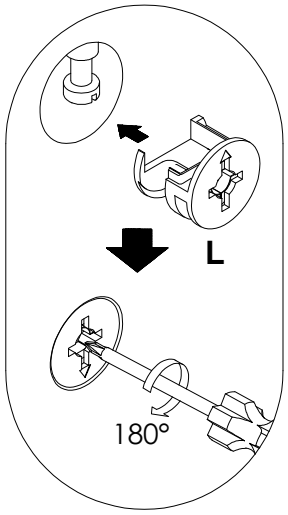

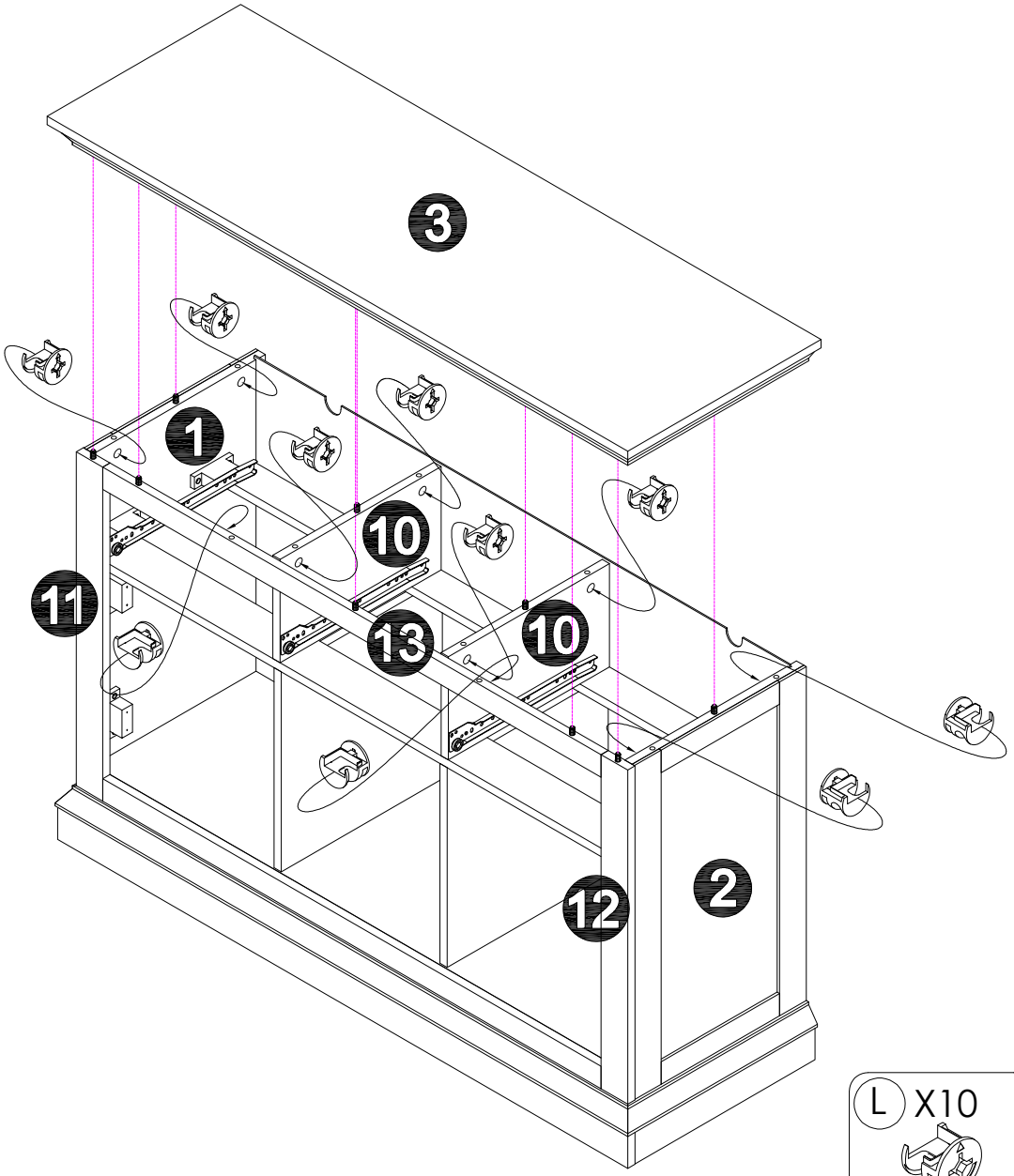

L X10

STEP 18

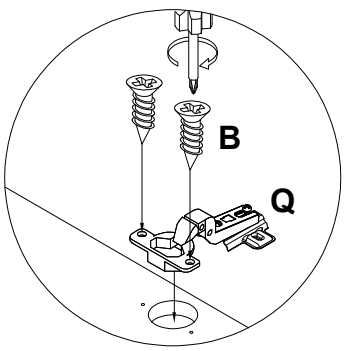

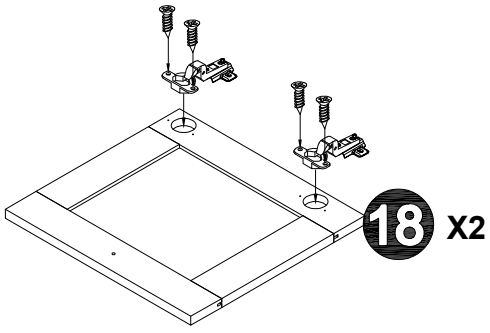

B X8



Q X4

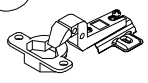

ASSEMBLY INSTRUCTION

DESCRIPTION:
5339
HANNA LARGE SIDEBOARD

STEP 19

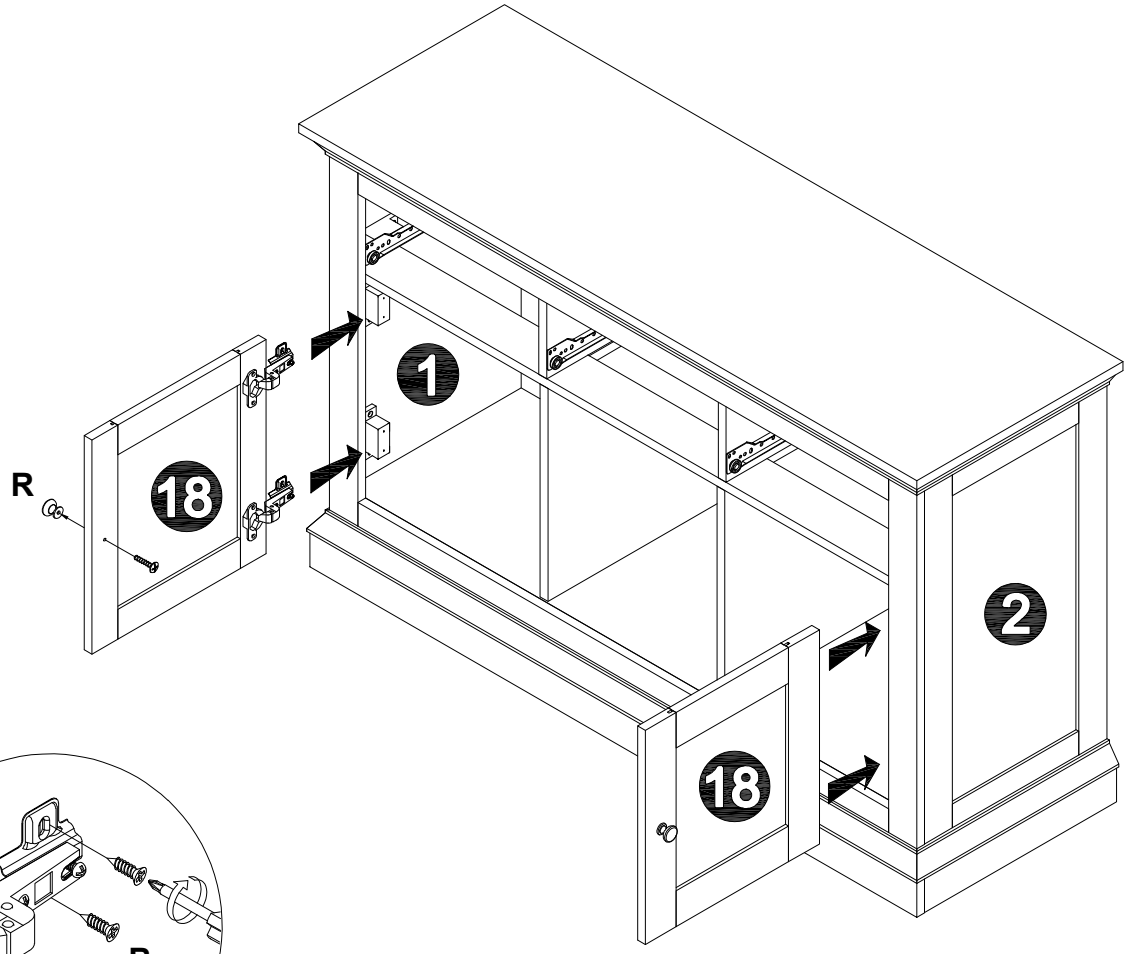

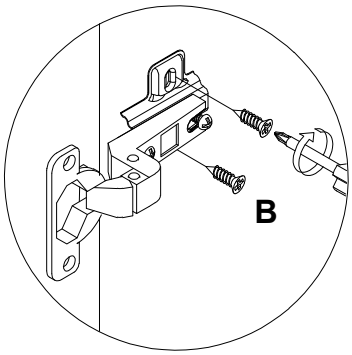

HINGE ADJUSTMENT GUIDE

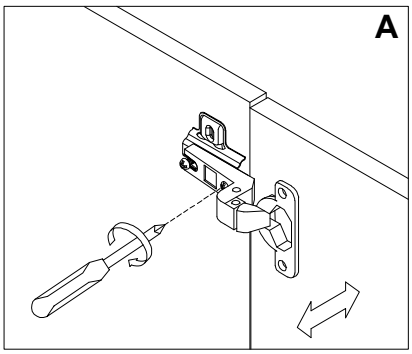

A. Lateral adjustment by screw adjusting

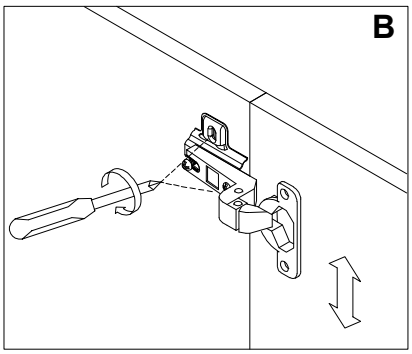

B. Vertical adjustment via slot in the mounting plate

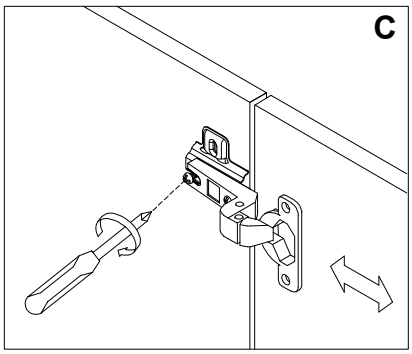

C. Front-to-Back by the slacking the hinge arm mounting screw

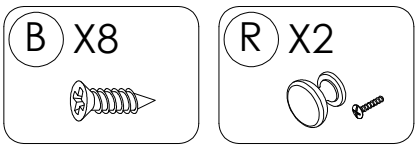

ASSEMBLY INSTRUCTION

DESCRIPTION:
5339
HANNA LARGE SIDEBOARD

STEP 20

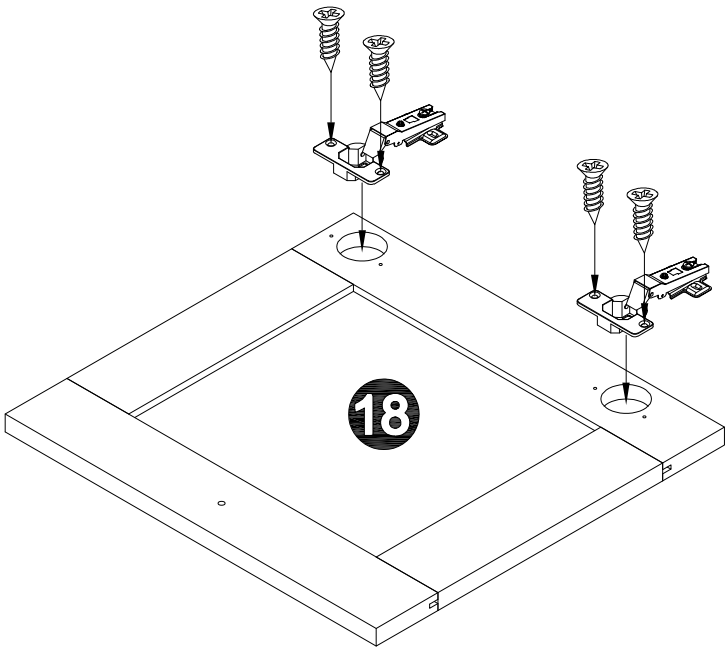

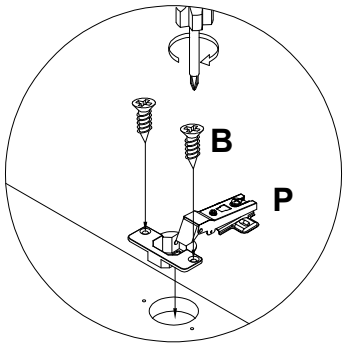

B X4



P X2



ASSEMBLY INSTRUCTION

DESCRIPTION:
5339
HANNA LARGE SIDEBOARD

STEP 21

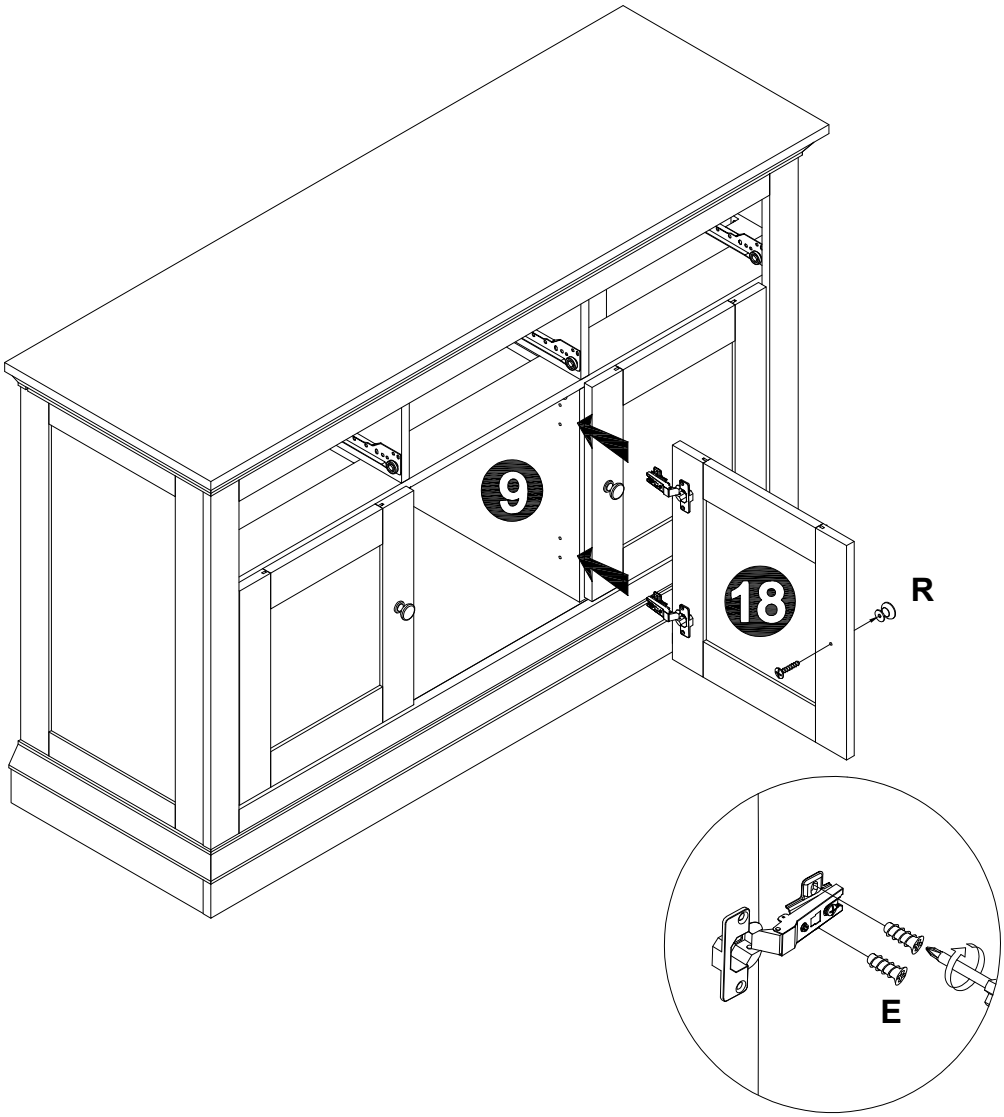

HINGE ADJUSTMENT GUIDE

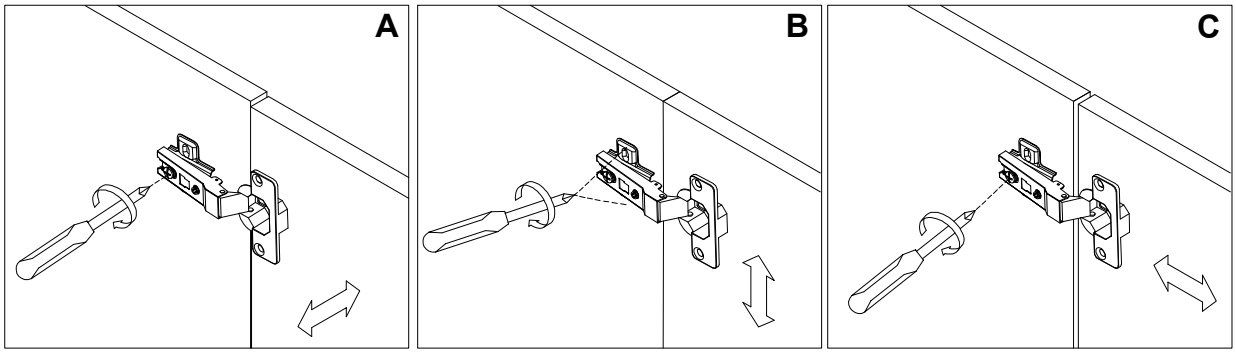

A. Lateral adjustment by screw adjusting

B. Vertical adjustment via slot in the mounting plate

C. Front-to-Back by the slacking the hinge arm mounting screw

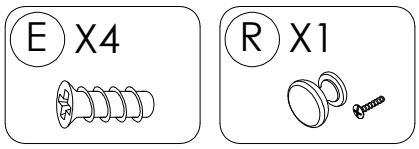

ASSEMBLY INSTRUCTION

DESCRIPTION:
5339
HANNA LARGE SIDEBOARD

STEP 22

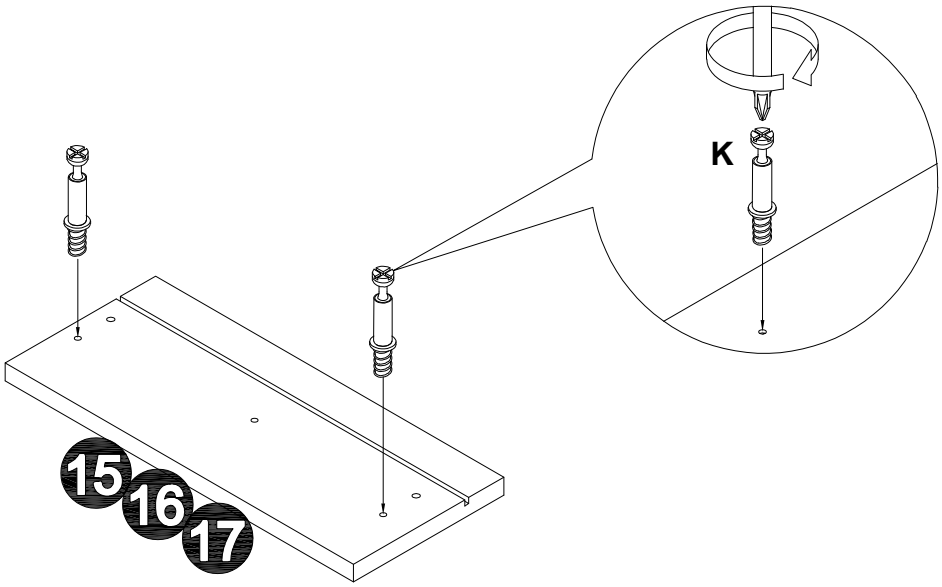

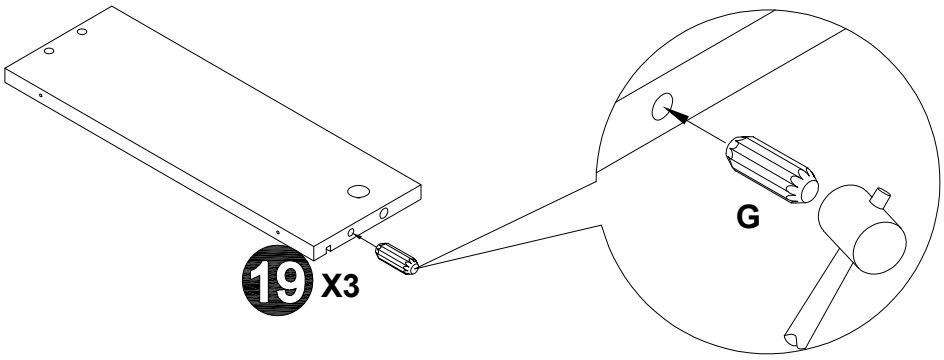

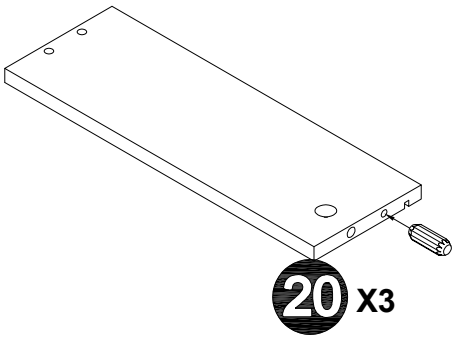

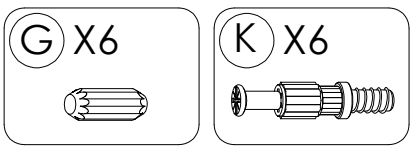

ASSEMBLY INSTRUCTION

DESCRIPTION:
5339
HANNA LARGE SIDEBOARD

STEP 23

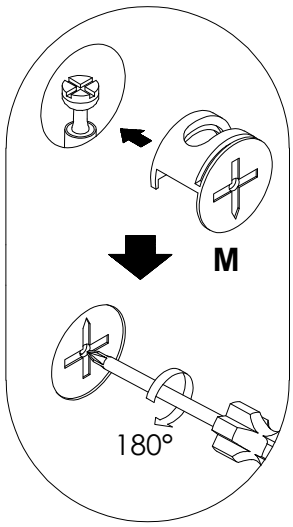

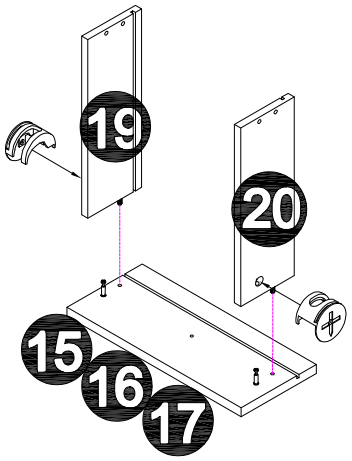



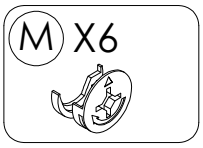

STEP 24

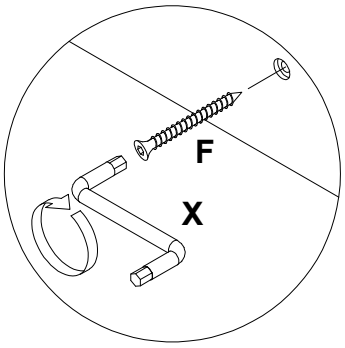

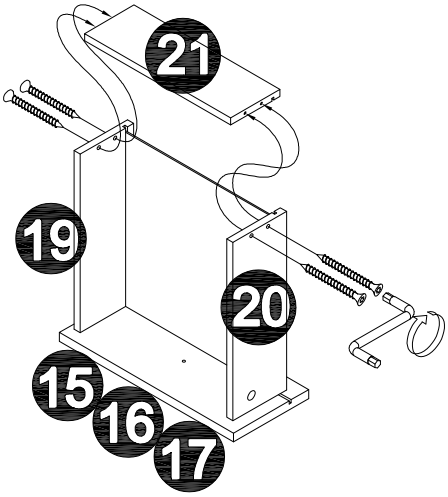

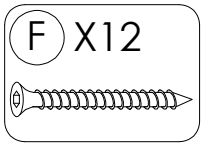

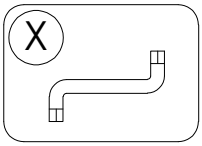

ASSEMBLY INSTRUCTION

DESCRIPTION:
5339
HANNA LARGE SIDEBOARD

STEP 25

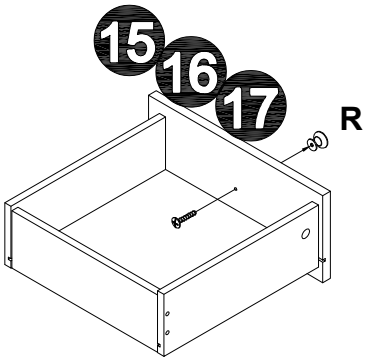

R X3

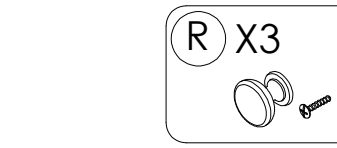

STEP 26

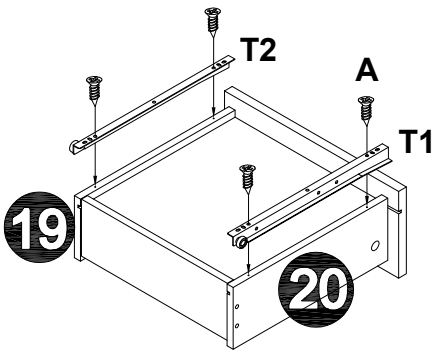

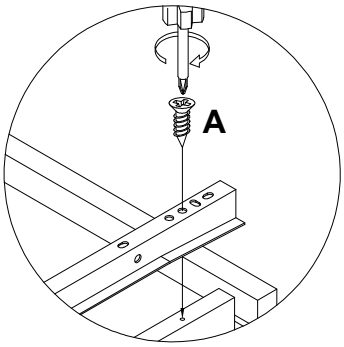

X3

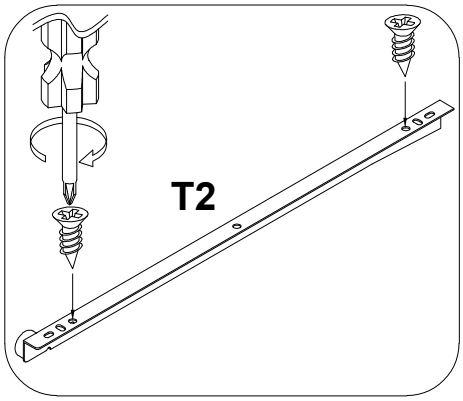

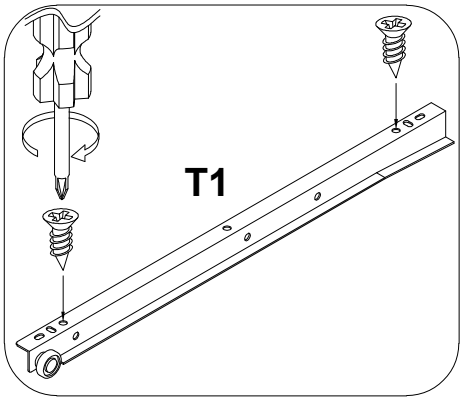

A X12

T1 X3

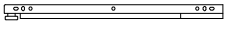

T2 X3

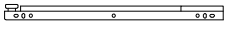

ASSEMBLY INSTRUCTION

DESCRIPTION:
5339
HANNA LARGE SIDEBOARD

STEP 27

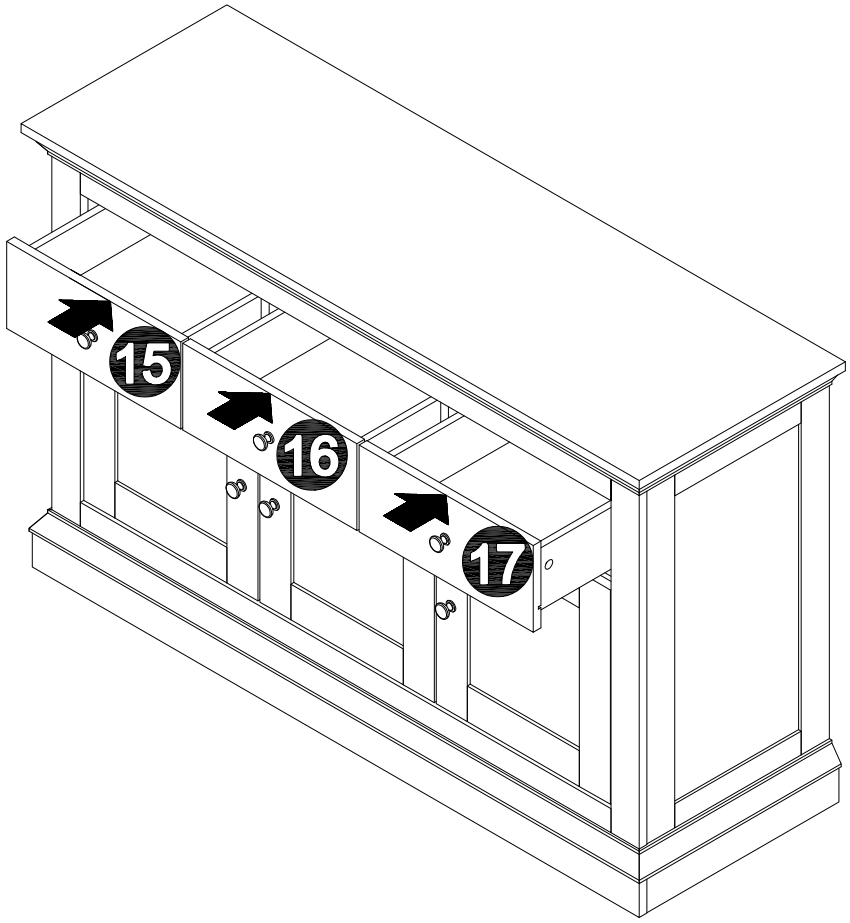

ASSEMBLY INSTRUCTION

DESCRIPTION:
5339
HANNA LARGE SIDEBOARD

STEP 28

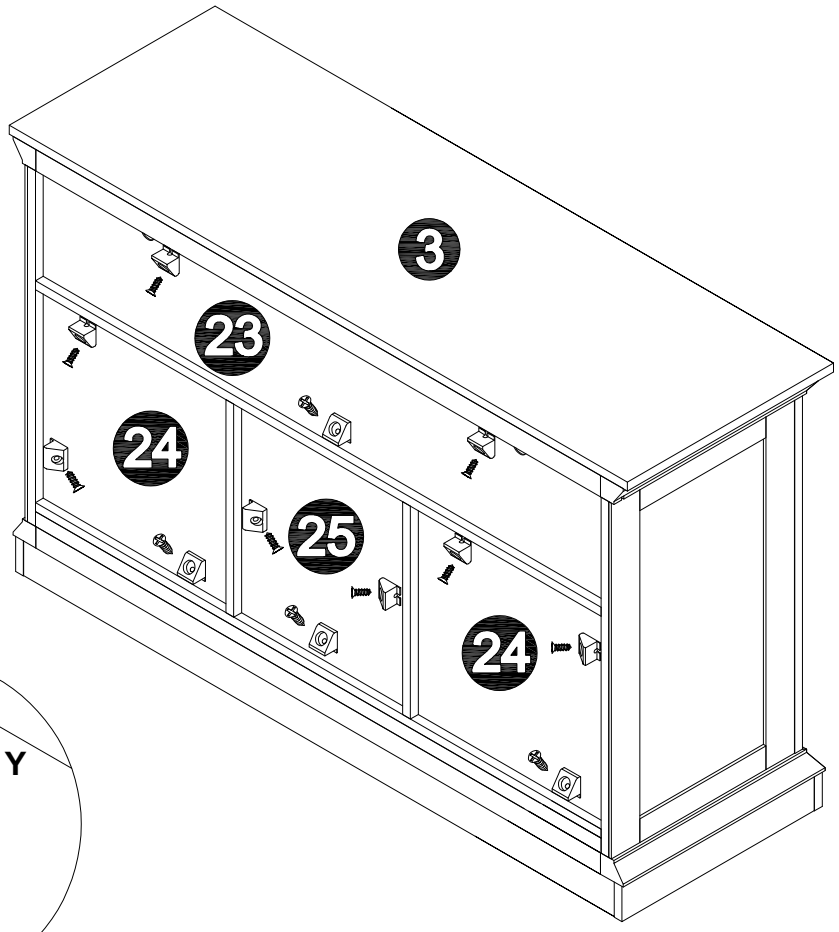

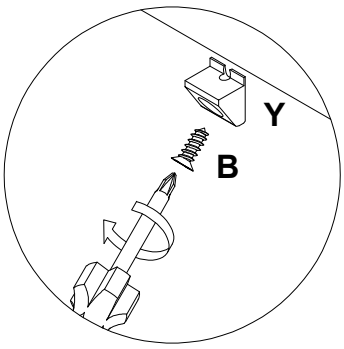

B X12



Y X12



ASSEMBLY INSTRUCTION

DESCRIPTION:
5339
HANNA LARGE SIDEBOARD

STEP 29

DIFFERENT WALL MATERIAL REQUIRE DIFFERENT TYPES OF FIXING DEVICES. USE FIXING DEVICES SUITABLE FOR THE WALLS IN YOUR HOME, SOLD SEPARATELY. PLEASE SEEK PROFESSIONAL ADVICE IF YOU ARE IN DOUBT OF WHAT FIXING SHOULD BE USE..



WARNING, PLEASE READ TO Reduce the risk to toppling furniture

- NEVER open more than one drawer at the time.
- NEVER allow children to stand, climb or hang on furniture. It may topple and cause serious injury or death.
- Do not place toys or other child appealing items on top of this furniture.
- ALWAYS anchor this product to a wall or other suitable surface. check anchors regularly.
- Place heavy items in lower drawers
- Use of anti toppling restraints may only reduce, but will not eliminate the risk to tip over.

NEVER put a TV on this product.
For more information please visit www.productsafety.gov.au

Screw and wall plugs are not provided, please use appropriate fixtures for your wall.

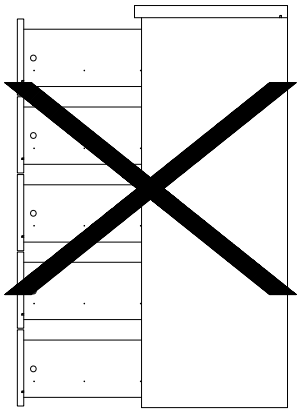

CAUTION :
PLEASE DO NOT FULLY OPEN DRAWERS SIMULTANEOUSLY AS IT WILL CAUSE THE DRAWER CHEST TO FALL DOWN.

