# ASSEMBLY INSTRUCTION

# DESCRIPTION:
## 5472
## BALLINA 2 DOOR 3 DRAWER SIDEBOARD

**2.5 HR**

**APPROXIMATE ASSEMBLY TIME**

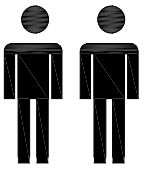

**2 PERSON ASSEMBLY**

**FLOOR AREA**
**1.4M X 2.4M**

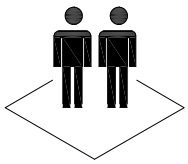

**REQUIRED ASSEMBLY SPACE**

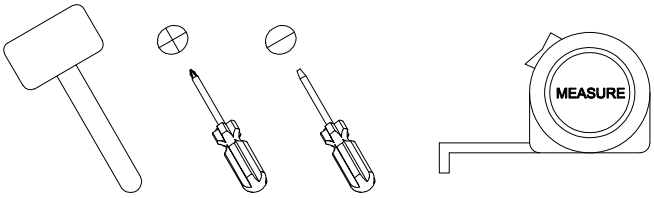


**REQUIRED ASSEMBLY TOOLS (NOT PROVIDED)**

**ASSEMBLED DIMENSION**

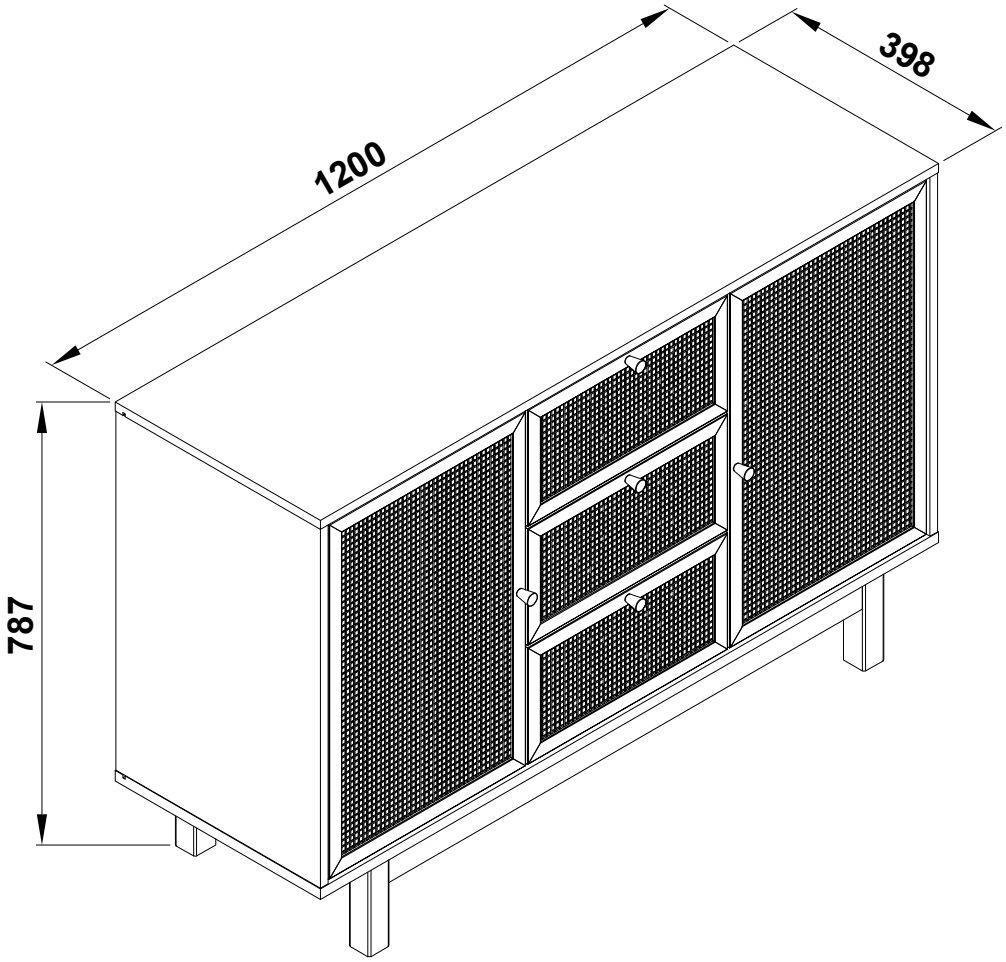

## WARNING : ENSURE THE WALL STRAP IS ATTACHED TO AVOID SERIOUS INJURY OR DEATH.

To avoid any serious or fatal injury, a wall strap has been provided with this product to prevent toppling. Always secure this product with an anchor device to the wall or suitable surface. Wall fixing hardware are not included since different surface materials require different attachments. Please seek professional advice if you are in doubt of what fixing device to use.

**Your product has been provided with a permanent safety label that should never be removed for safety reasons.**




For more information please visit www.productsafety.gov.au

# ASSEMBLY INSTRUCTION

# DESCRIPTION:
## 5472
## BALLINA 2 DOOR 3 DRAWER SIDEBOARD

## PART LIST

**PACK 1 CONSIST OF**
3, 4, 7, 8, 9, 10, 13, 14
15, 16

AI AND FITTINGS

**PACK 2 CONSIST OF**
1, 2, 5, 6, 11, 12, 17, 18

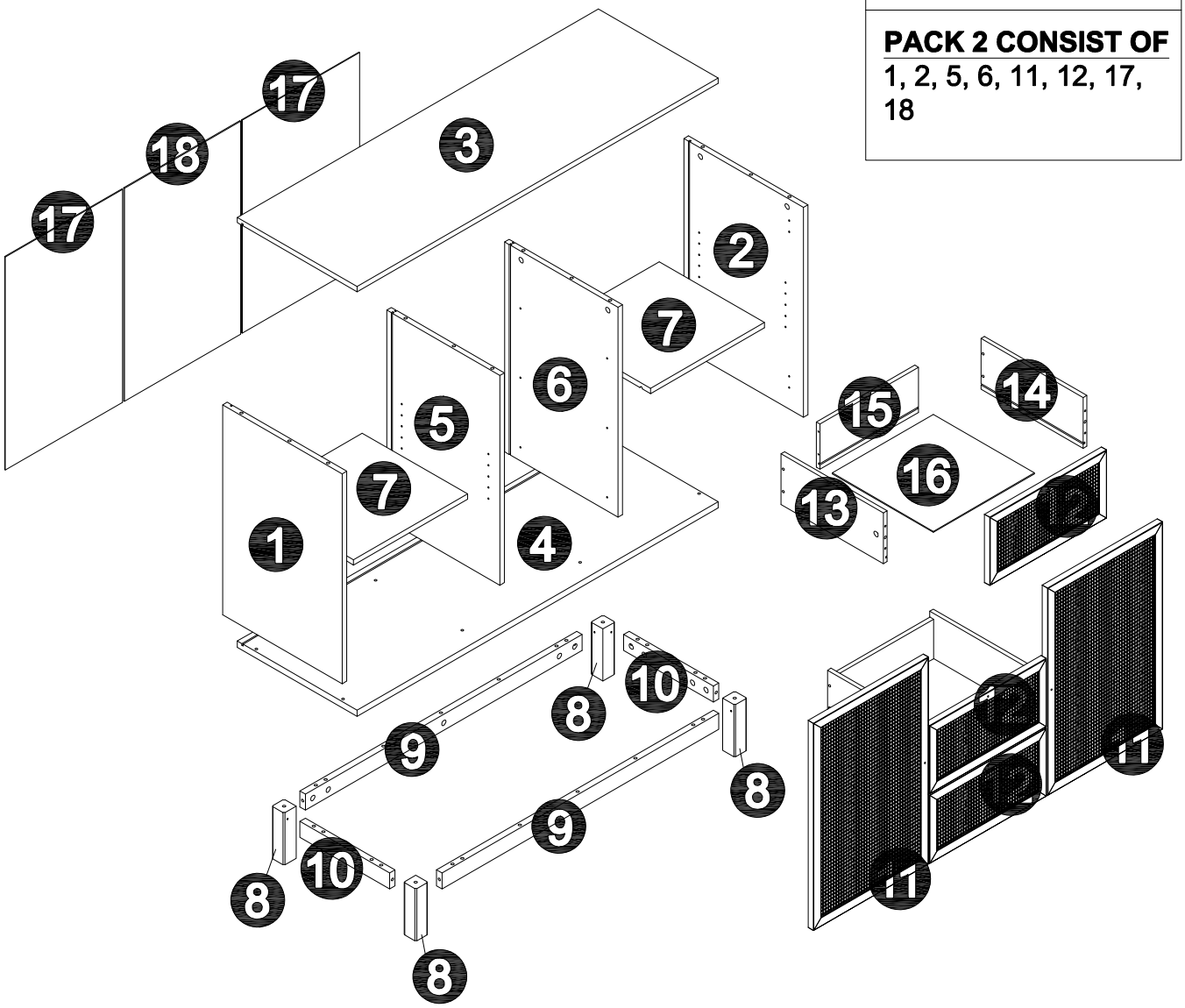


| NO. | PART LIST | QTY | NO. | PART LIST | QTY |
|---|---|---|---|---|---|
| (1) | PART 1 | 1 | (10) | PART 10 | 2 |
| (2) | PART 2 | 1 | (11) | PART 11 | 2 |
| (3) | PART 3 | 1 | (12) | PART 12 | 3 |
| (4) | PART 4 | 1 | (13) | PART 13 | 3 |
| (5) | PART 5 | 1 | (14) | PART 14 | 3 |
| (6) | PART 6 | 1 | (15) | PART 15 | 3 |
| (7) | PART 7 | 2 | (16) | PART 16 | 3 |
| (8) | PART 8 | 4 | (17) | PART 17 | 2 |
| (9) | PART 9 | 2 | (18) | PART 18 | 1 |

# ASSEMBLY INSTRUCTION

# DESCRIPTION:
## 5472
## BALLINA 2 DOOR 3 DRAWER SIDEBOARD

## HARDWARE LIST

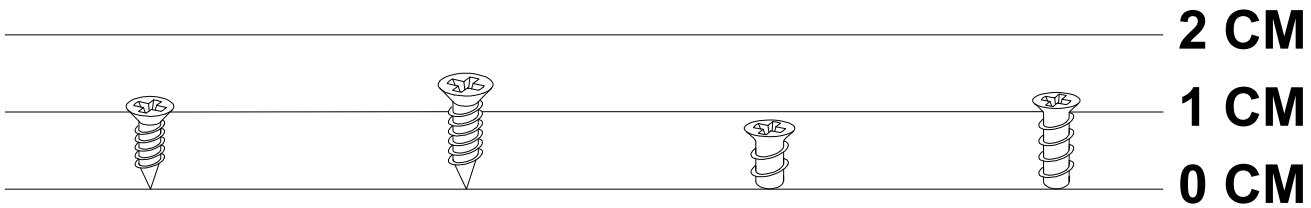


**X12**
**M3.5 X 12MM**
**A**
**SCREW**

**X20**
**M3.5 X 15MM**
**B**
**SCREW**

**X12**
**M6 X 9MM**
**C**
**SCREW**

**X8**
**M6 X 13MM**
**D**
**SCREW**

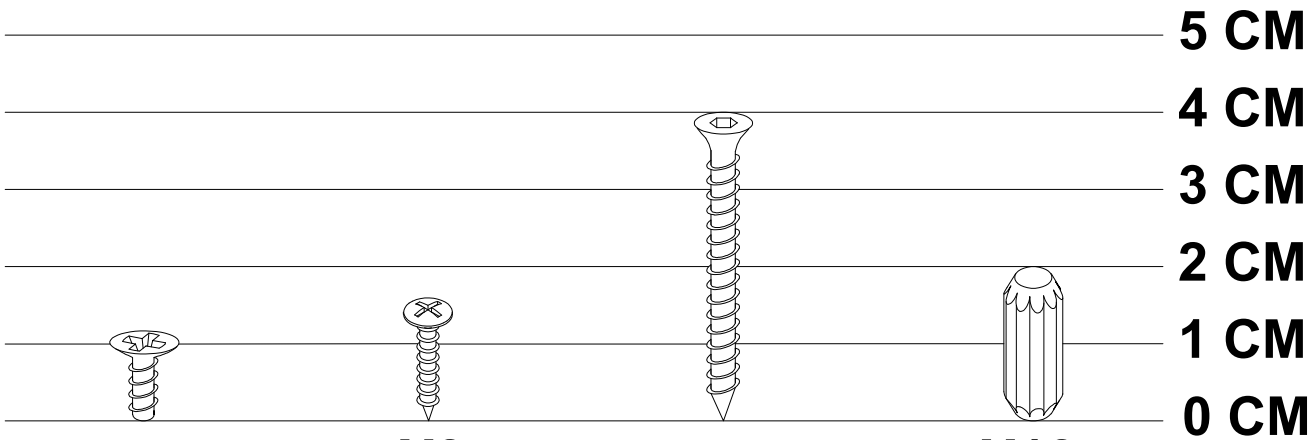


**X2**
**M6 X 13MM**
**E**
**SCREW**

**X2**
**M4 X 16MM**
**F**
**SCREW**

**X20**
**M6 X 40MM**
**G**
**SCREW**

**X12**
**Ø6 X 20MM**
**H**
**WOOD DOWEL**

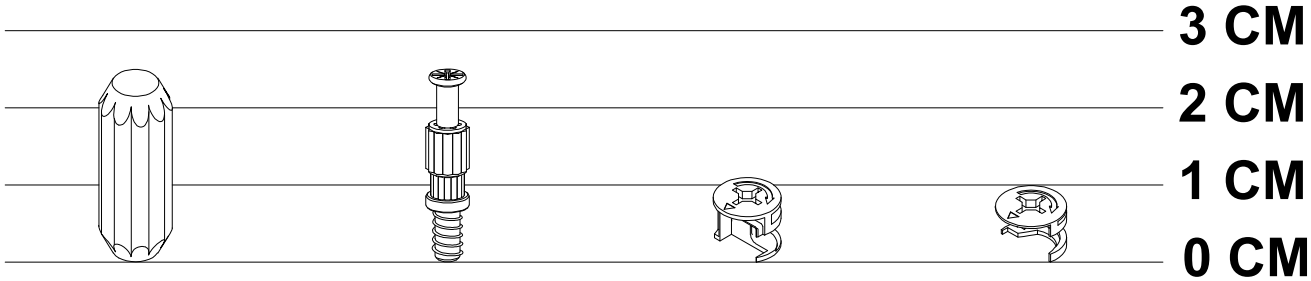


**X20**
**Ø8 X 25MM**
**J**
**WOOD DOWEL**

**X32**
**20 X 5MM**
**K**
**BOLT DOWEL**

**X26**
**Ø15 X 12MM**
**L**
**CAM**

**X6**
**Ø15 X 9MM**
**M**
**CAM**

# ASSEMBLY INSTRUCTION

# DESCRIPTION:
# 5472
## BALLINA 2 DOOR 3 DRAWER SIDEBOARD

## HARDWARE LIST

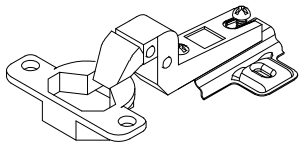

**X4 SETS**

**N**

**METAL HINGES (7/8") W/ SPRING**



**X5 SETS**

**P**

**HANDLE (MC4 X 25MM)**

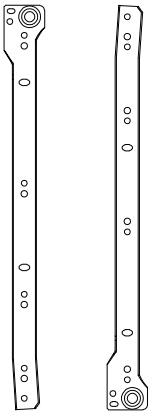

**X3 SETS**

**Q1 & Q2**

**DRAWER SLIDE (350MM)**

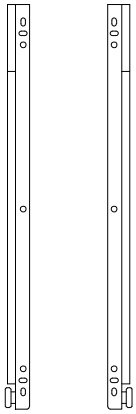

**X3 SETS**

**R1 & R2**

**DRAWER SLIDE (350MM)**

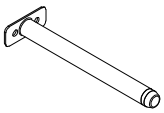

**X1**

**S**

**T SHAPE METAL LEG WITH ADJUSTABLE LEG (D19 X W25 X L60 X H145)**

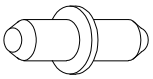

**X8**

**T**

**METAL ADJUSTABLE SHELF STUD**



**X1**

**U**

**ALLEN KEY M4**

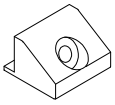

**X12**

**V**

**BACKPLY STOPPER**

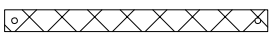

**X2**

**W**

**PP STRAP 12 X 150 X 1.2MM BLK 2 HOLE WITH EYELEY**

| ASSEMBLY INSTRUCTION | **DESCRIPTION:**<br>**5472**<br>**BALLINA 2 DOOR 3 DRAWER SIDEBOARD** |
|---|---|

## Top Tips before you start!

1. Please check that all parts are present before you start the assembly of your furniture, as once assembled, the furniture is exempt from our home approval policy.

2. For ease and speed of assembly, we recommend that before you commence each step of the assembly, that you identify all the parts required for the step.

3. For larger items, please ensure that you have sufficient space and people (as indicated on page 1) to assemble your product safely.

4. We recommend that, where possible, all items are assembled near to the area in which they will be placed in use, to avoid moving the product unnecessarily once assembled.

5. For the protection of your furniture, particularly items of high gloss finish, we recommend that the product is placed on a protected surface during assembly to prevent any damage.

6. During assembly please take care not to over-tighten any fittings, as this may damage the product.

## Care and Maintenance of your Furniture

- Please periodically check all fittings and re-tighten as necessary.
- Please do not drag or pull your furniture.
- Wipe occasionally with a soft cloth slightly dampened with water. Then buff with a dry clean soft cloth.
- Never allow any kind of liquid to remain on your furniture. Absorption can cause wood to warp or finishes to de-laminate.
- Please do not sit or stand on this item.

# Special Tips for Fitting Minifix Cam (Cam-Lock), and Minifix Bolt (Cam-Bolts)

## CAM-BOLT

Tighten until shoulder is flush with panel. Do not overtighten or undertighten (see example below).

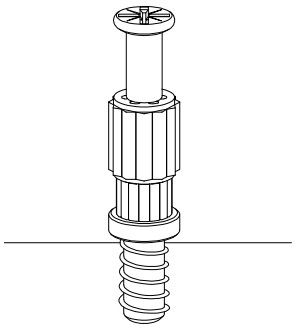


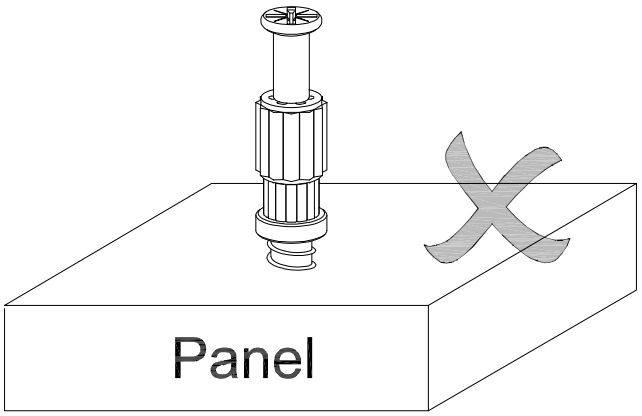


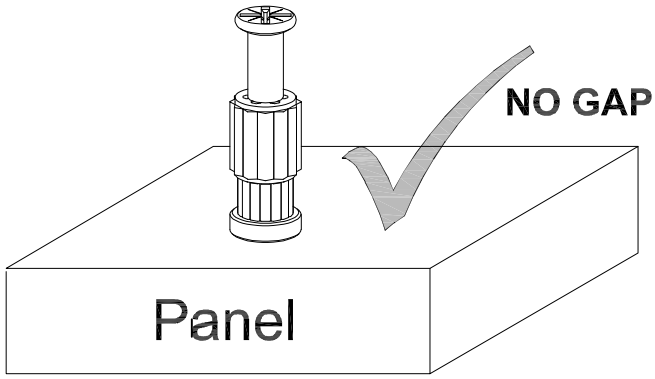


## CAM-LOCK

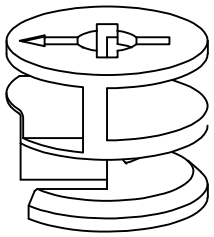

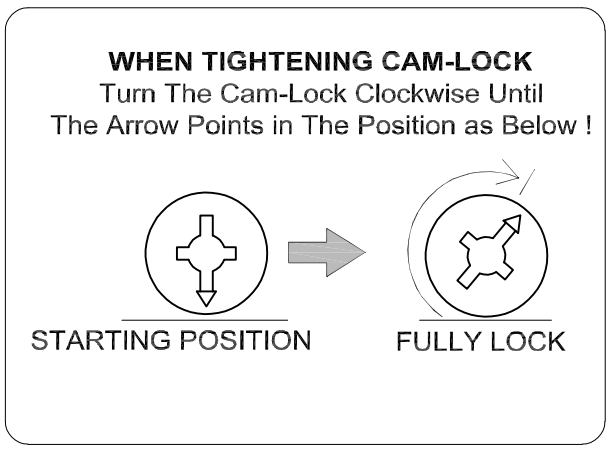


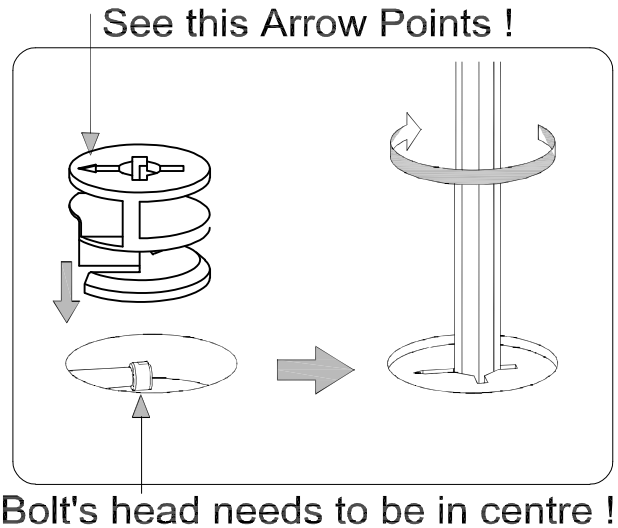

# ASSEMBLY INSTRUCTION

# DESCRIPTION:
## 5472
## BALLINA 2 DOOR 3 DRAWER SIDEBOARD

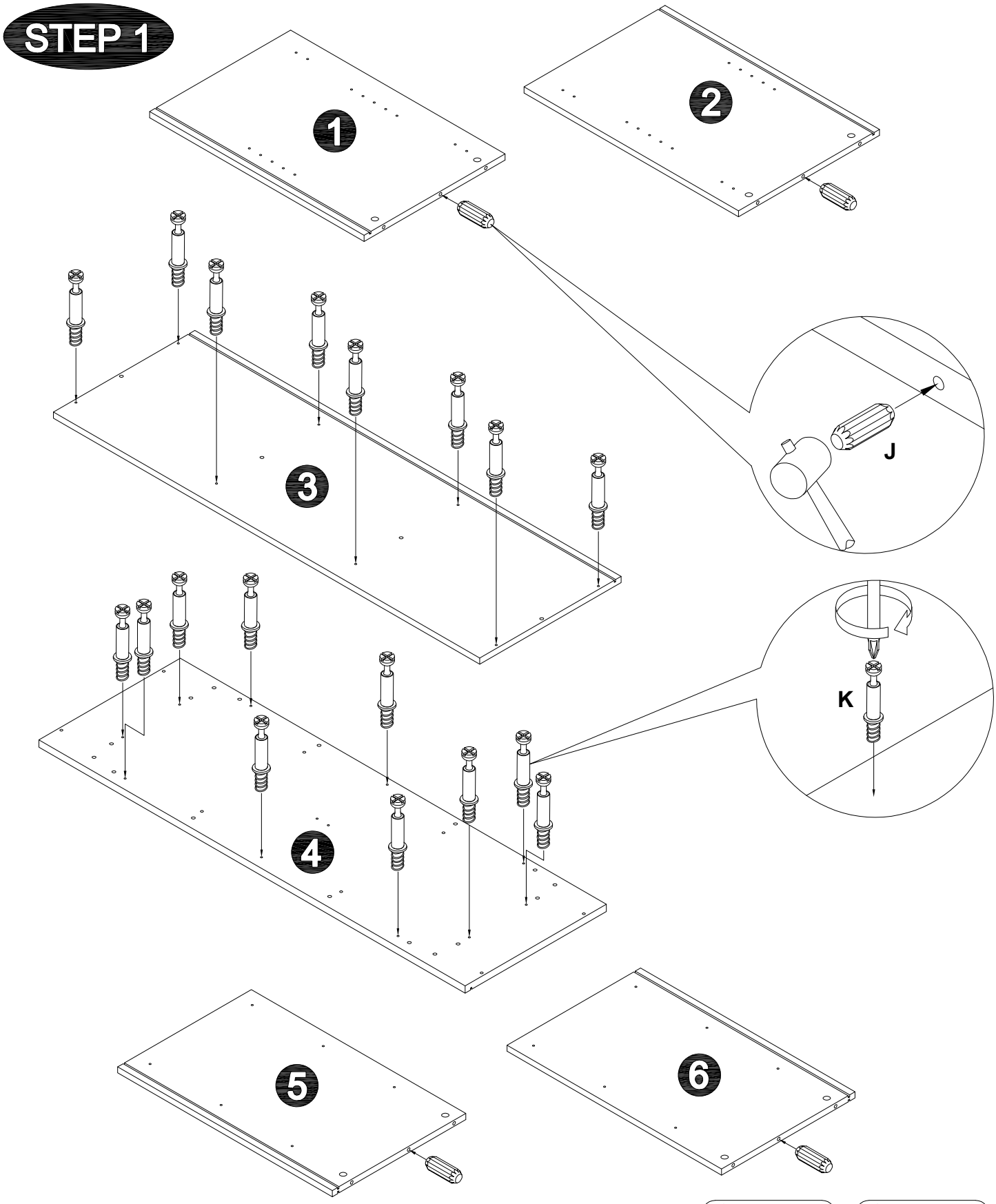

# ASSEMBLY INSTRUCTION

# DESCRIPTION:
# 5472
## BALLINA 2 DOOR 3 DRAWER SIDEBOARD

## STEP 2

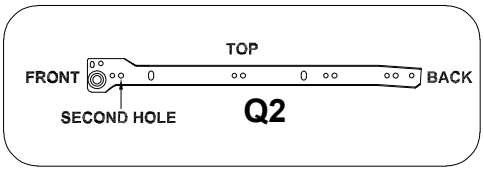


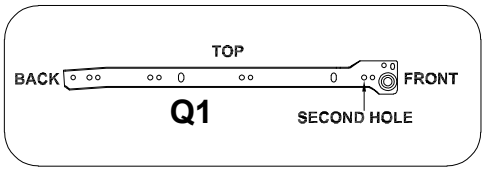


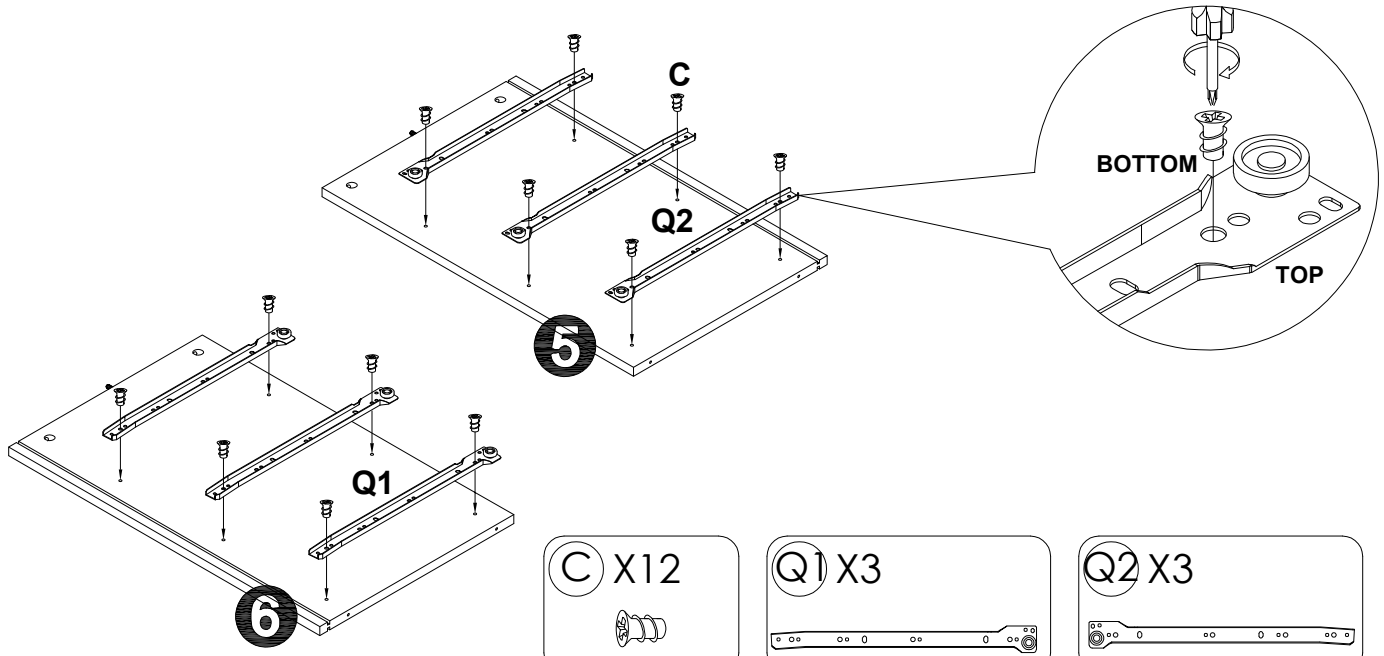


C X12



Q1 X3



Q2 X3



## STEP 3

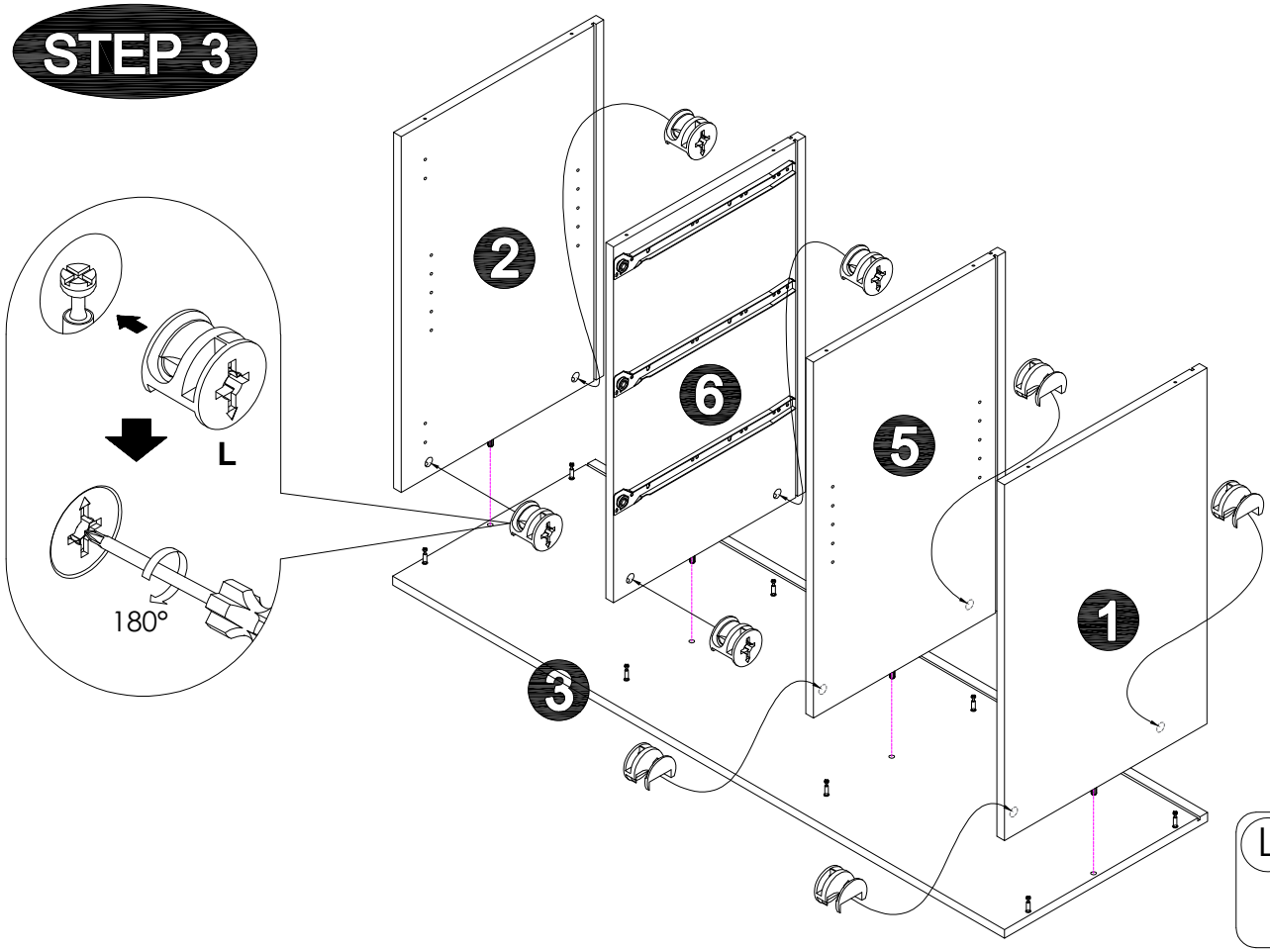


L X8



# ASSEMBLY INSTRUCTION

# DESCRIPTION:
# 5472
## BALLINA 2 DOOR 3 DRAWER SIDEBOARD

**STEP 4**

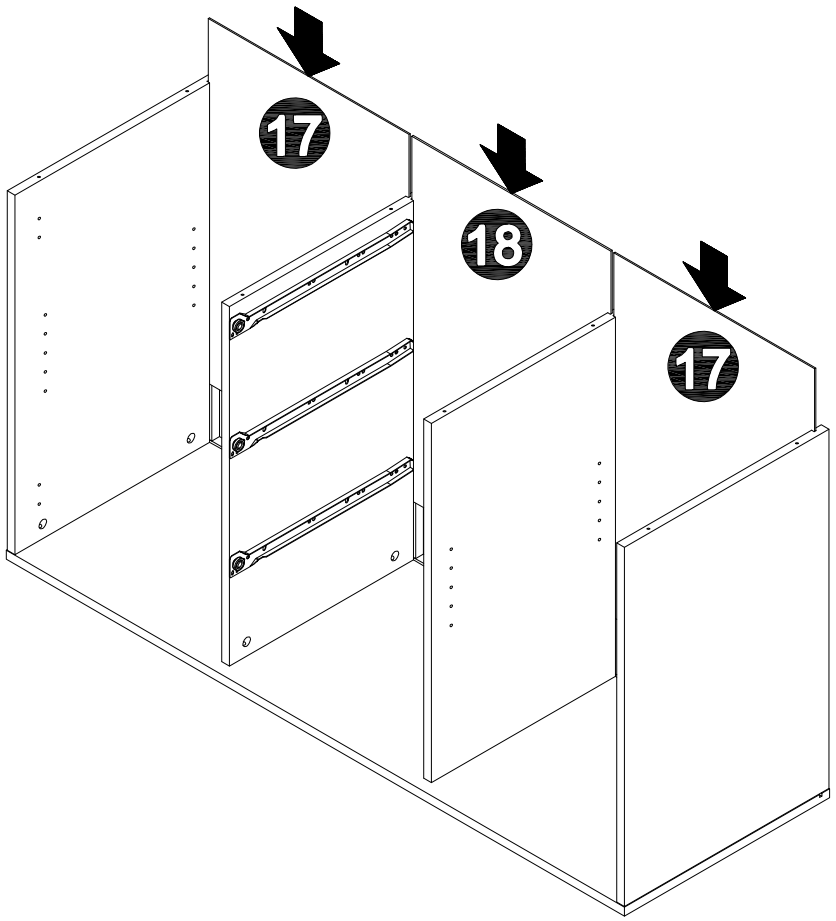

# ASSEMBLY INSTRUCTION

# DESCRIPTION:
# 5472
## BALLINA 2 DOOR 3 DRAWER SIDEBOARD

## STEP 5

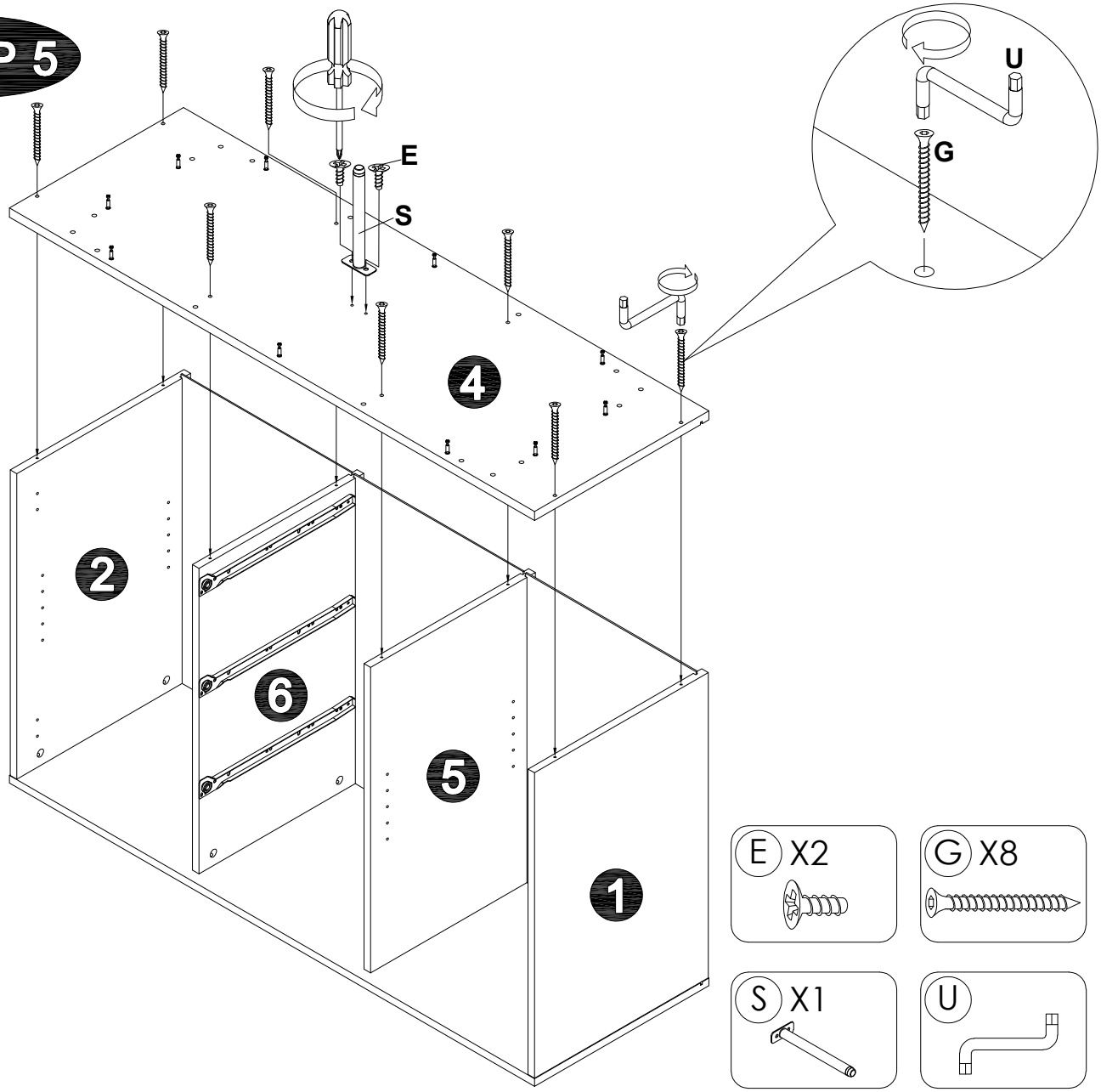





## STEP 6

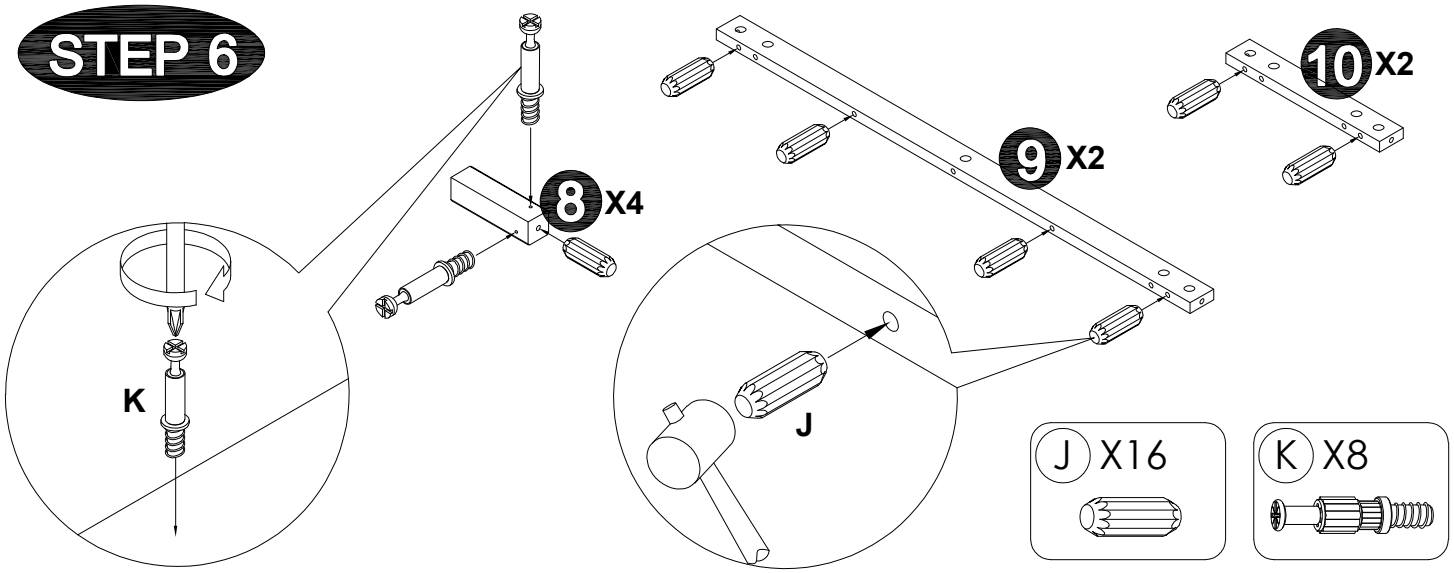

# ASSEMBLY INSTRUCTION

# DESCRIPTION:
## 5472
### BALLINA 2 DOOR 3 DRAWER SIDEBOARD

## STEP 7

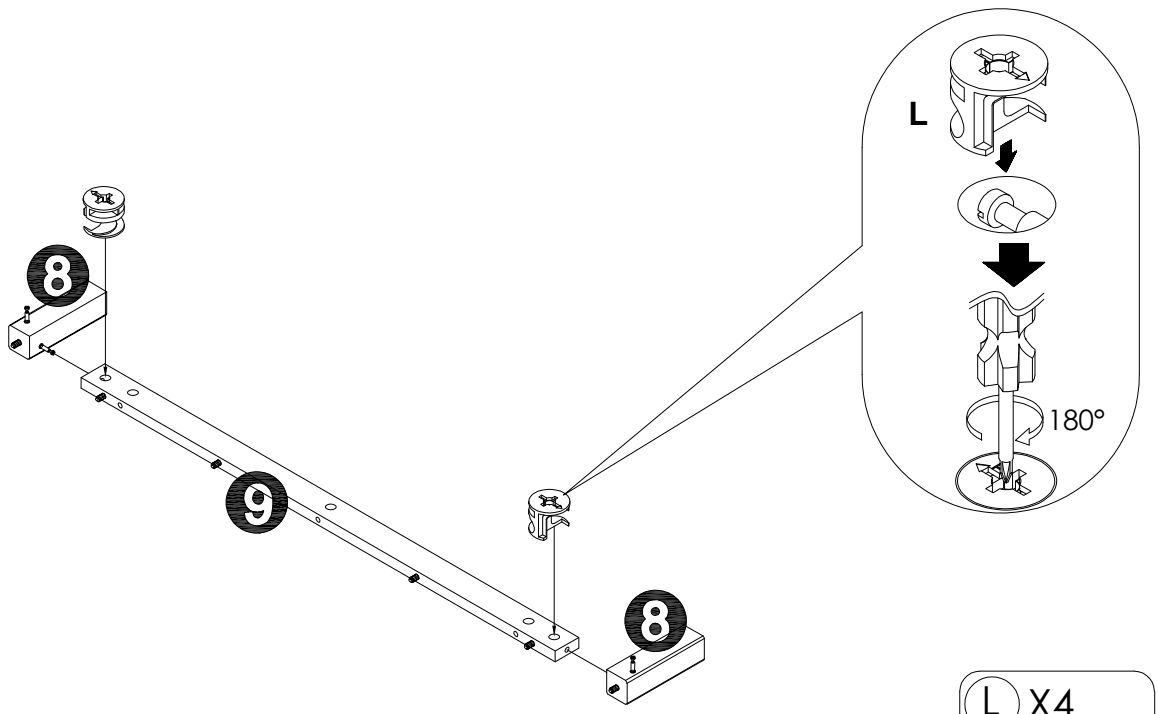


**X2**

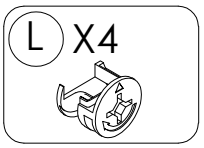


## STEP 8

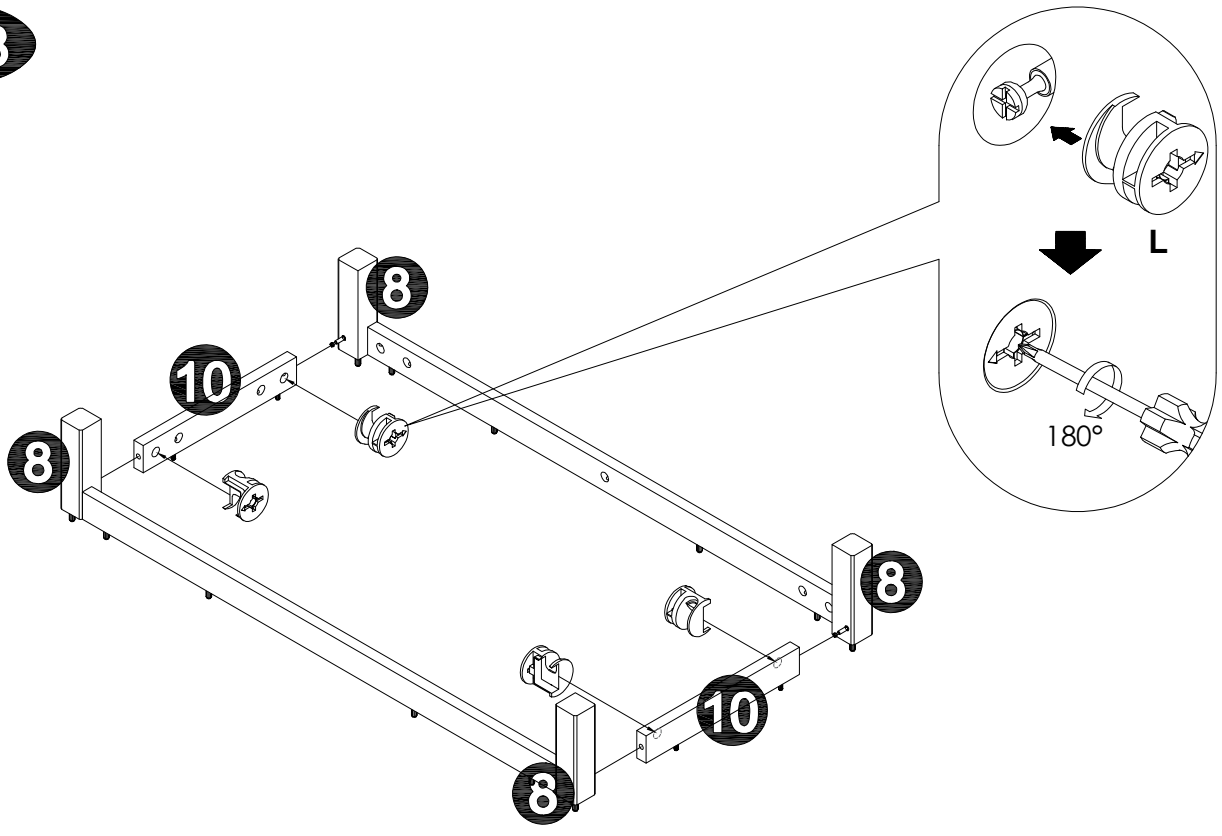


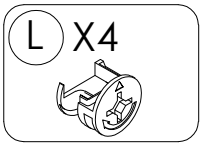

# ASSEMBLY INSTRUCTION

# DESCRIPTION:
# 5472
## BALLINA 2 DOOR 3 DRAWER SIDEBOARD

**STEP 9**

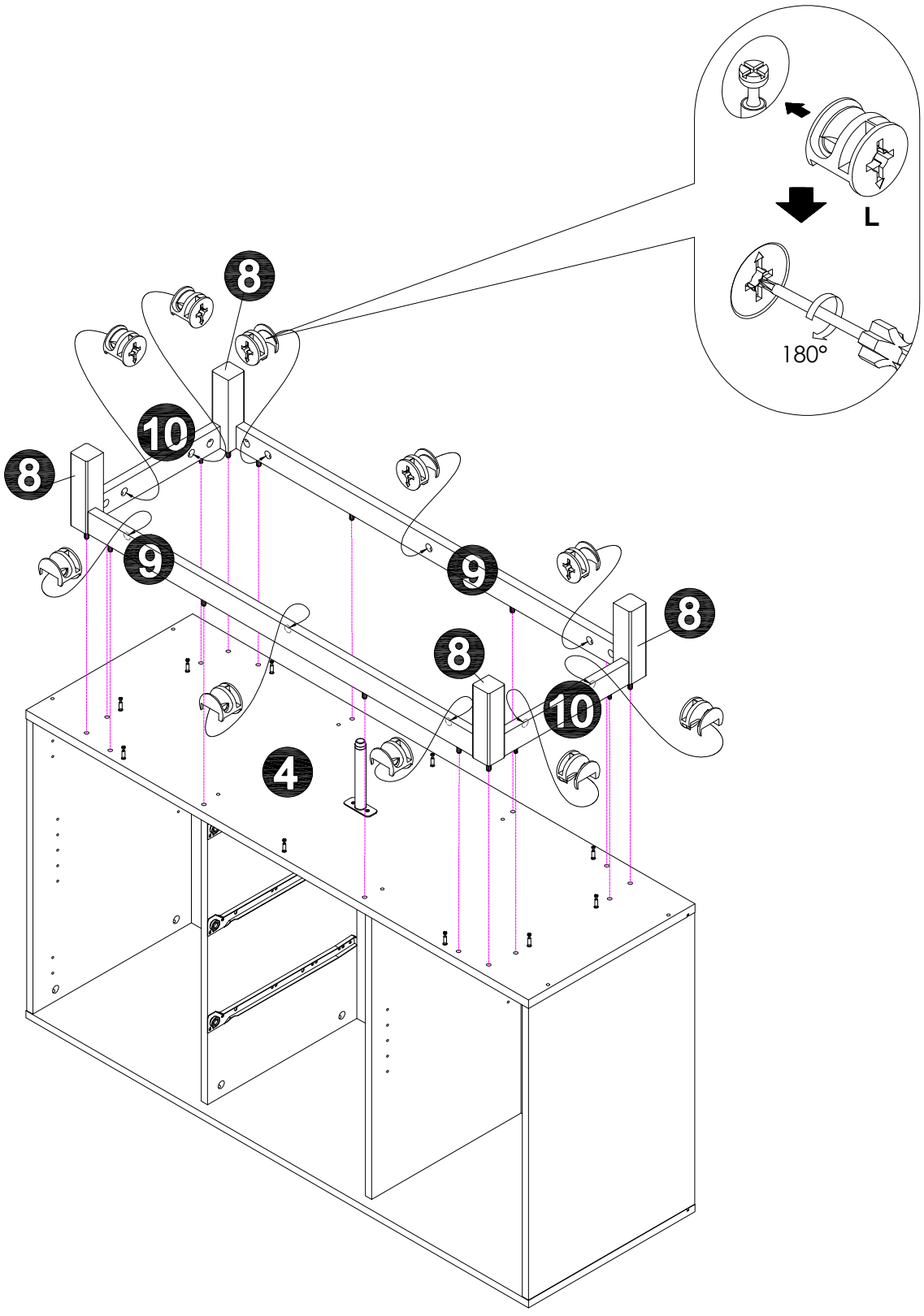


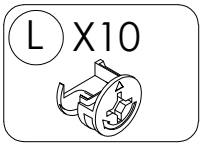

# ASSEMBLY INSTRUCTION

# DESCRIPTION:
## 5472
### BALLINA 2 DOOR 3 DRAWER SIDEBOARD

## STEP 10

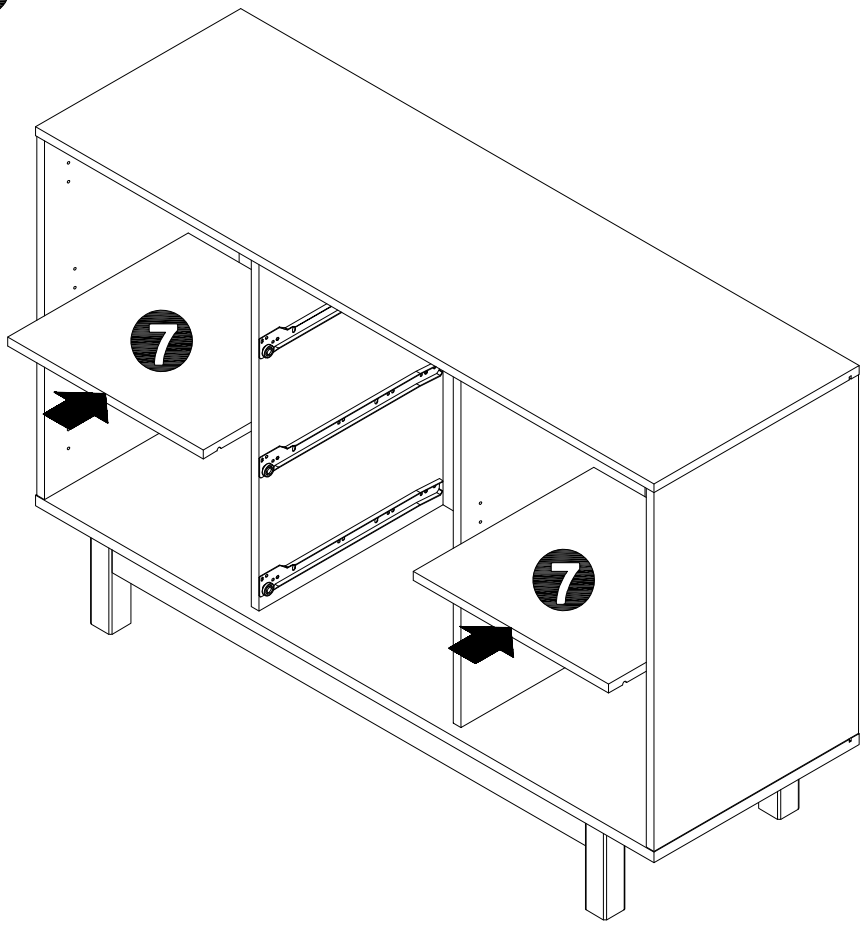


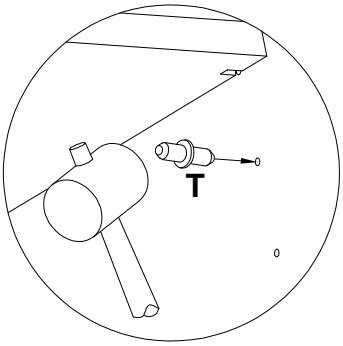


T X8

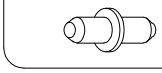

## STEP 11

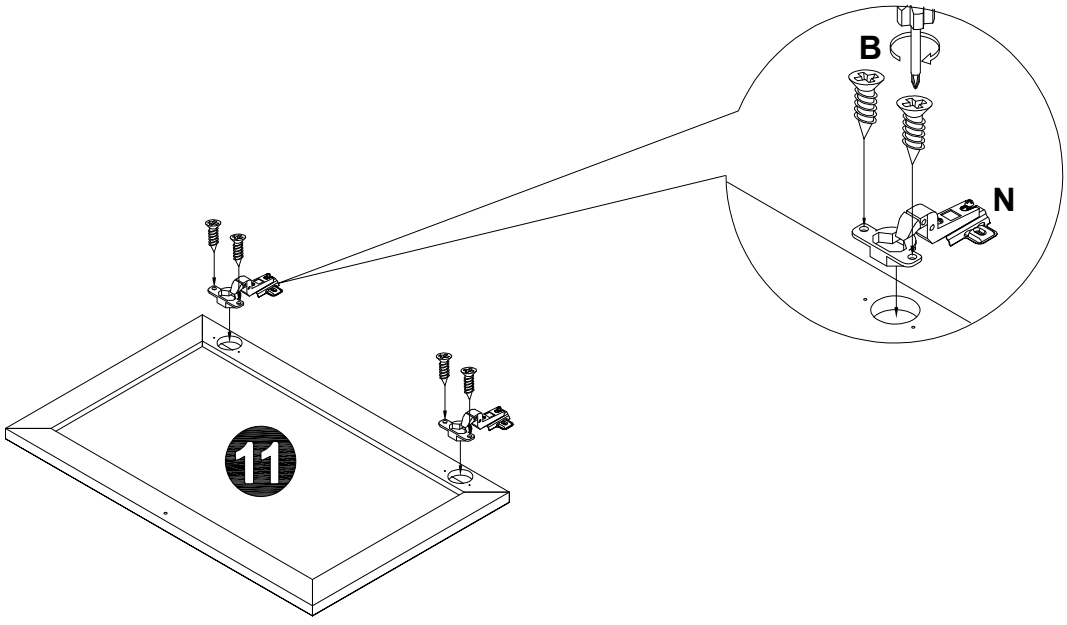


**X2**

B X8



N X4



# ASSEMBLY INSTRUCTION

# DESCRIPTION:
## 5472
## BALLINA 2 DOOR 3 DRAWER SIDEBOARD

**STEP 12**

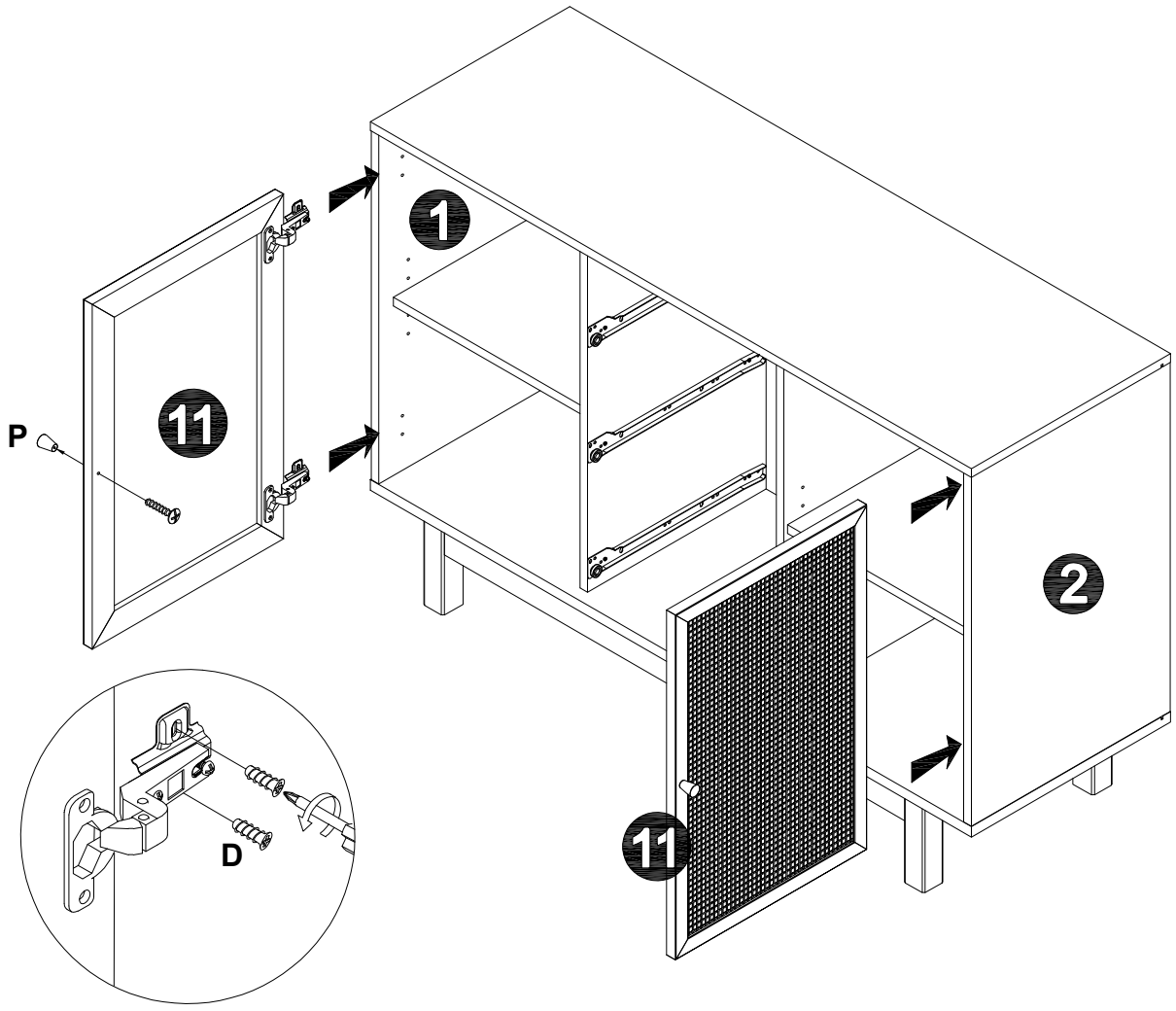


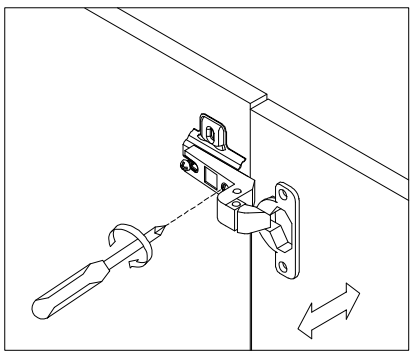

**A.** Lateral adjustment by screw adjusting

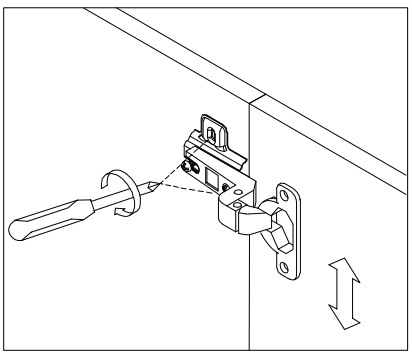

**B.** Vertical adjustment via slot in the mounting plate

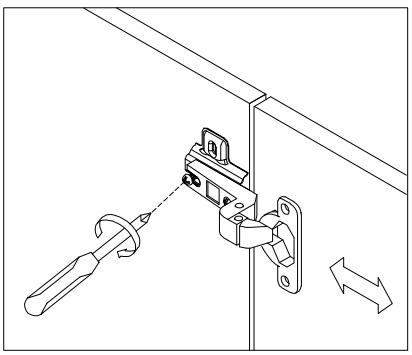

**C.** Front-to-Back by the slacking the hinge arm mounting screw

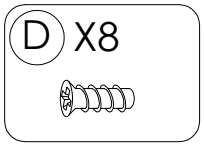


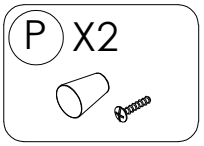

# ASSEMBLY INSTRUCTION

# DESCRIPTION:
## 5472
## BALLINA 2 DOOR 3 DRAWER SIDEBOARD

## STEP 13

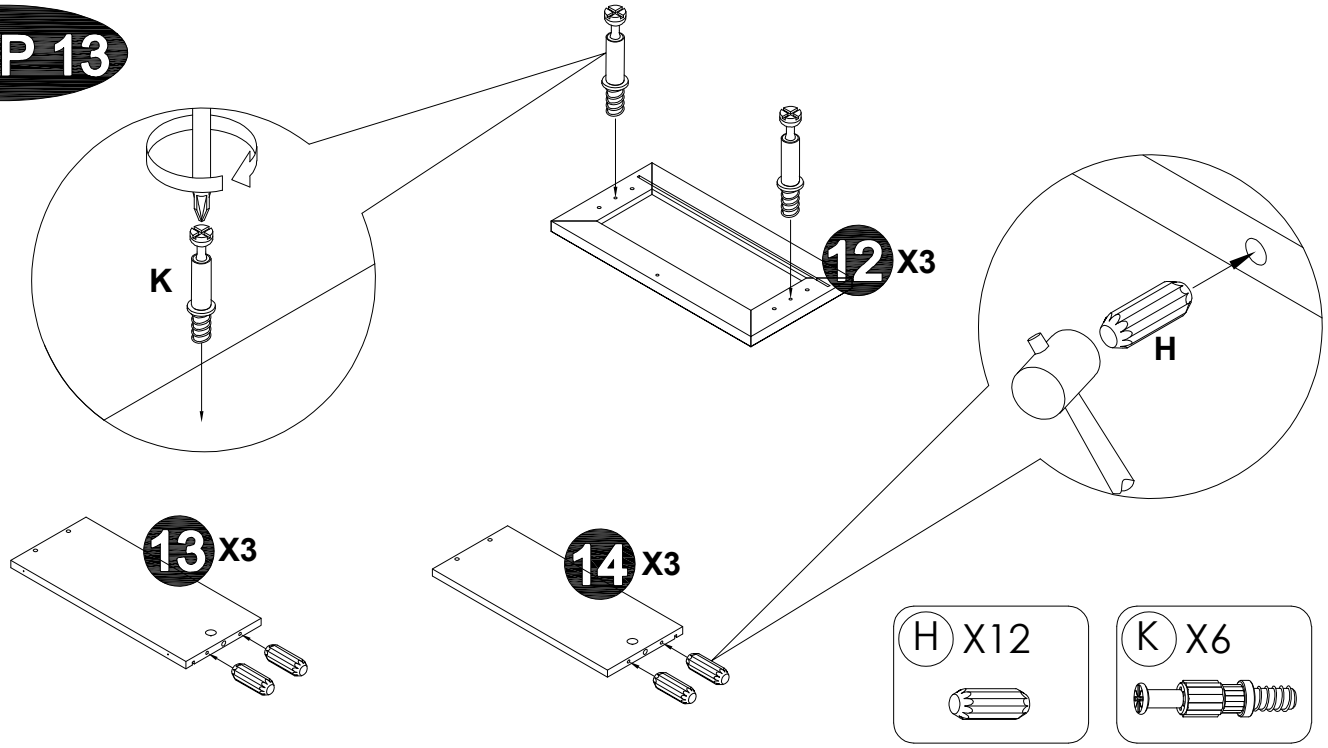


## STEP 14

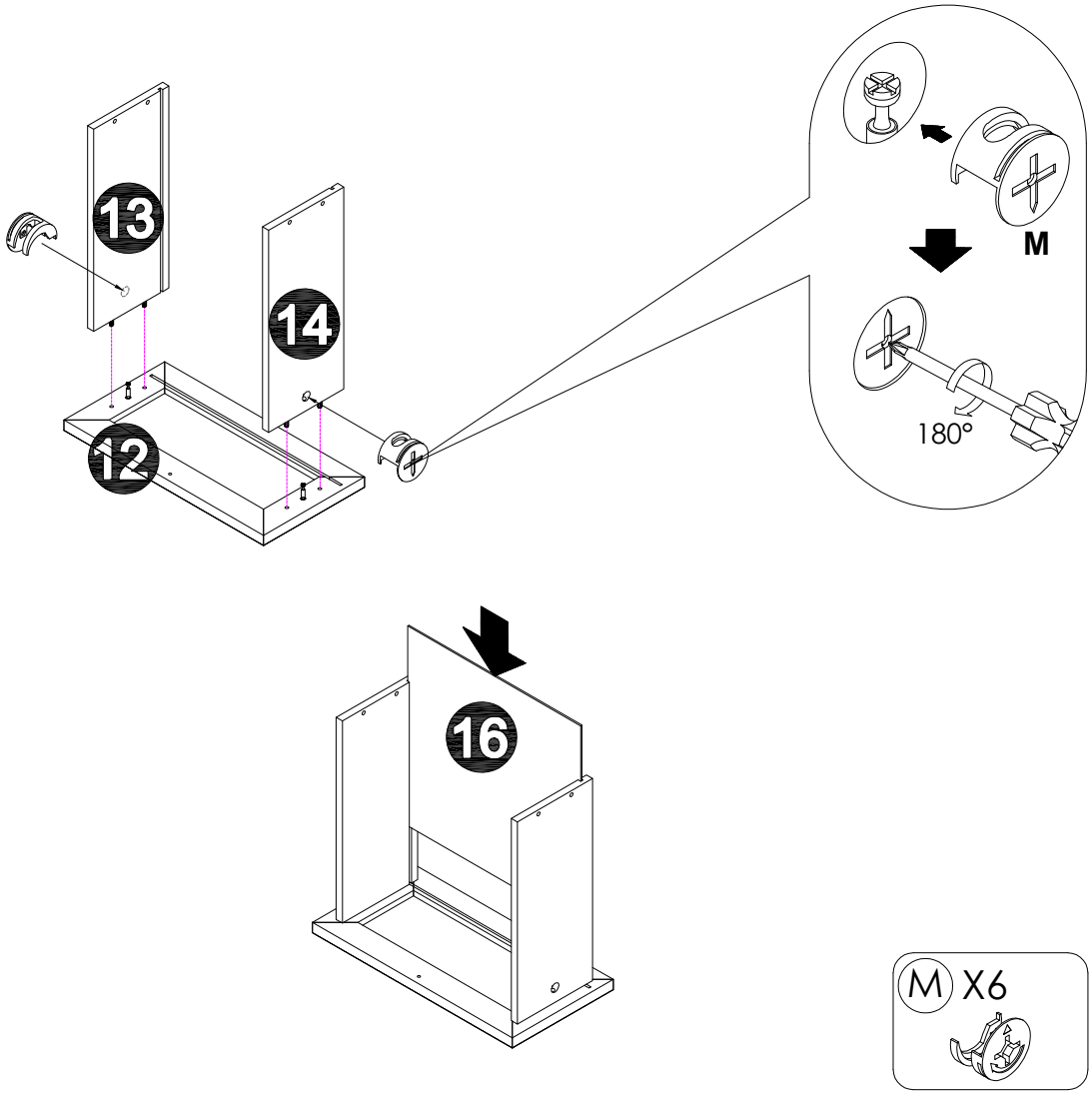


**X3**

# ASSEMBLY INSTRUCTION

# DESCRIPTION:
## 5472
### BALLINA 2 DOOR 3 DRAWER SIDEBOARD

## STEP 15

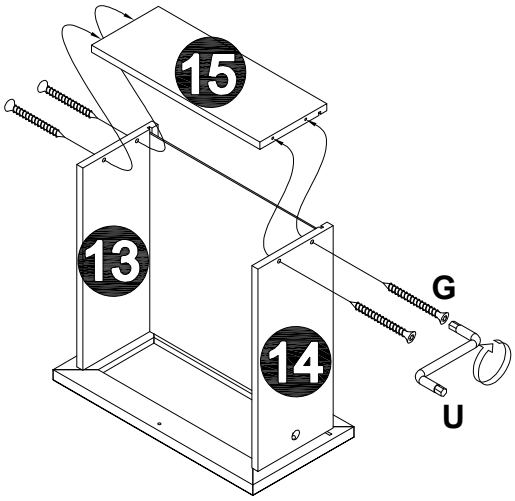


**X3**

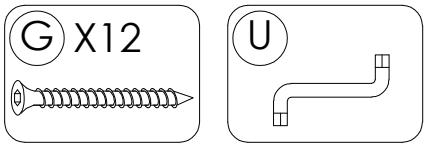


## STEP 16

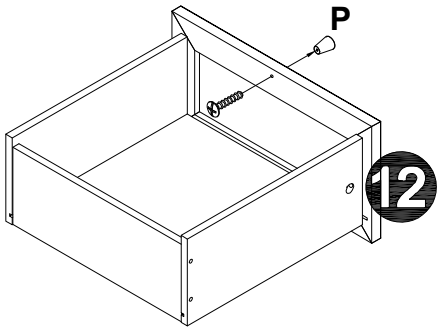


**X3**

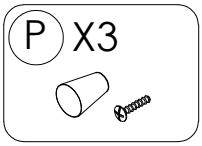

# ASSEMBLY INSTRUCTION

# DESCRIPTION:
# 5472
## BALLINA 2 DOOR 3 DRAWER SIDEBOARD

**STEP 17**

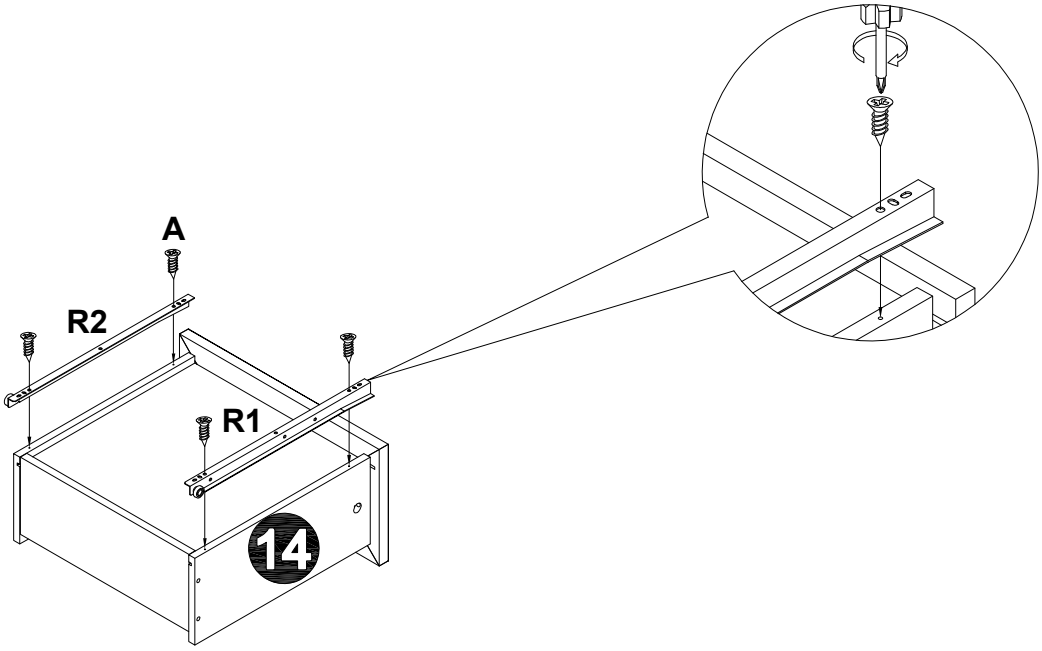


**X3**

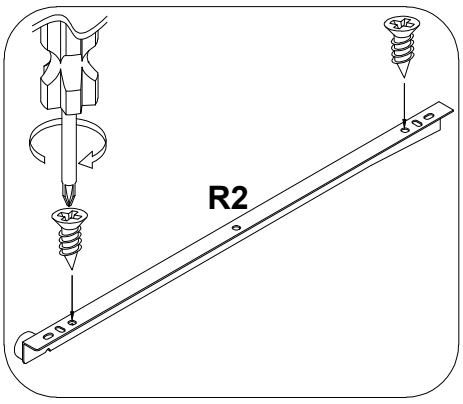


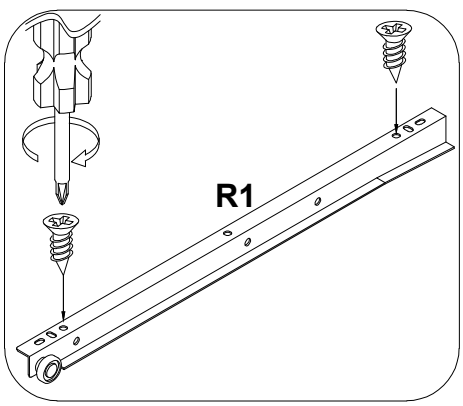


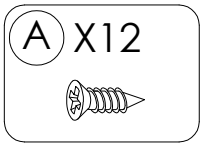


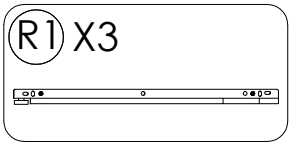


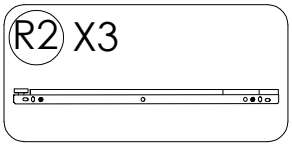

# ASSEMBLY INSTRUCTION

# DESCRIPTION:
# 5472
## BALLINA 2 DOOR 3 DRAWER SIDEBOARD

STEP 18

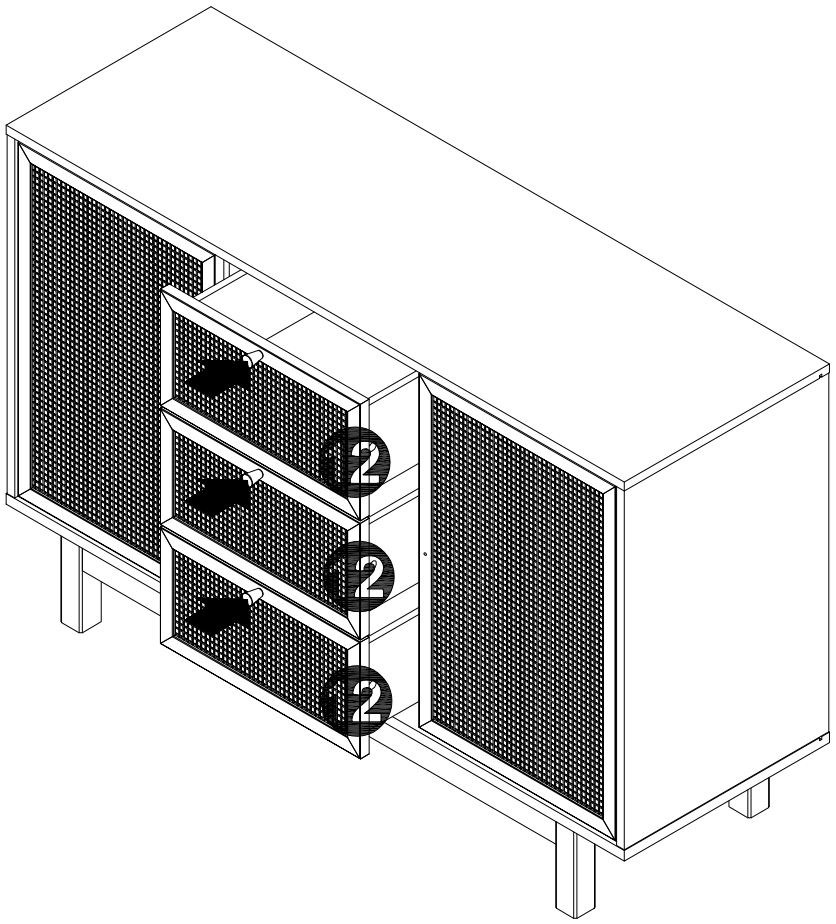

# ASSEMBLY INSTRUCTION

# DESCRIPTION:
# 5472
## BALLINA 2 DOOR 3 DRAWER SIDEBOARD

**STEP 19**

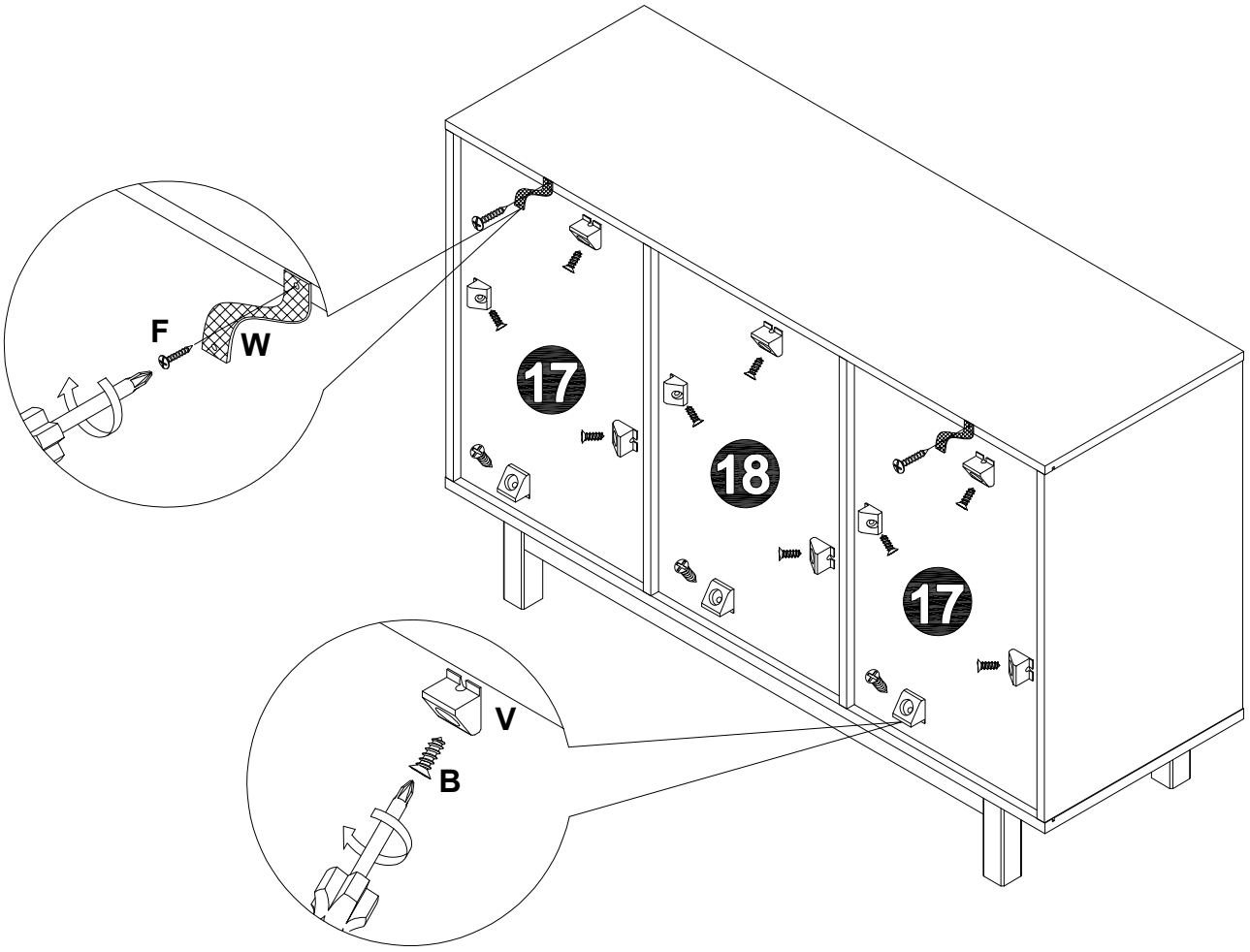


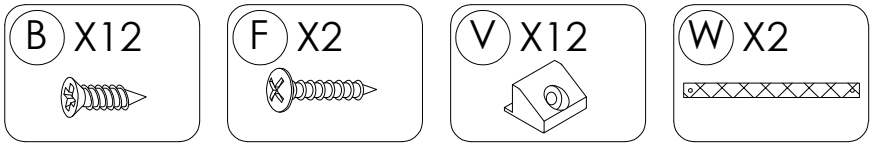

# ASSEMBLY INSTRUCTION

# DESCRIPTION:
# 5472
## BALLINA 2 DOOR 3 DRAWER SIDEBOARD

STEP 20

NOTE :
WALL PLUG & SCREW ARE NOT SUPPLIED WITH THIS PRODUCT AS DIFFERENT WALL MATERIALS REQUIRE DIFFERENT TYPES OF FIXING HARDWARE & YOU MUST USE SUITABLE FIXING HARDWARE FOR TYPE OF WALL YOU INTEND TO MOUNT THIS PRODUCT TO WALL.

**WALL**

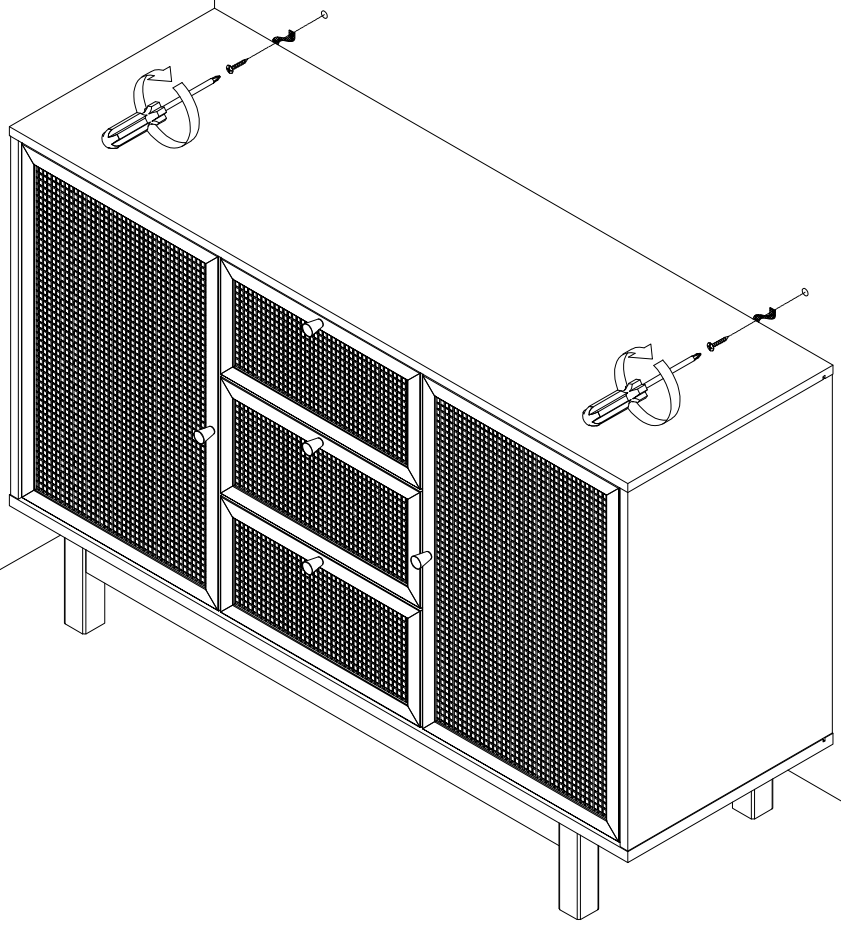

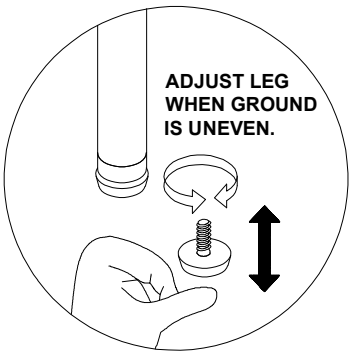

# ASSEMBLY IS COMPELETE

Different wall materials require different types of fixing devices.
Use fixing devices suitable for the walls in your home, sold separately.
Please seek professional advice if you are in doubt of what fixing should be use..




⚠ **WARNING, PLEASE READ TO Reduce the risk to toppling furniture**

- NEVER open more than one drawer at the time.
- NEVER allow children to stand, climb or hang on furniture. It may topple and cause serious injury or death.
- Do not place toys or other child appealing items on top of this furniture.
- ALWAYS anchor this product to a wall or other suitable surface. check anchors regularly.
- Place heavy items in lower drawers
- Use of anti toppling restraints may only reduce, but will not eliminate the risk to tip over.

NEVER put a TV on this product.
For more information please visit www.productsafety.gov.au

Screw and wall plugs are not provided, please use appropriate fixtures for your wall.

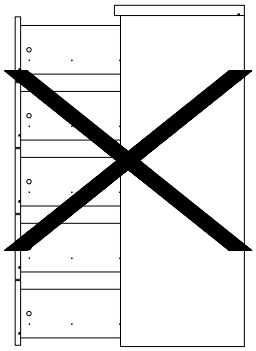

CAUTION :
PLEASE DO NOT FULLY OPEN DRAWERS SIMULTANEOUSLY AS IT WILL CAUSE THE DRAWER CHEST TO FALL DOWN.