ASSEMBLY INSTRUCTION

DESCRIPTION:
5514
ATMA 4 DOOR SIDEBOARD

2.5 HR

APPROXIMATE ASSEMBLY TIME

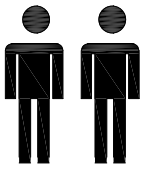

2 PERSON ASSEMBLY

FLOOR AREA
1.4M X 2.7M

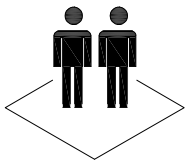

REQUIRED ASSEMBLY SPACE

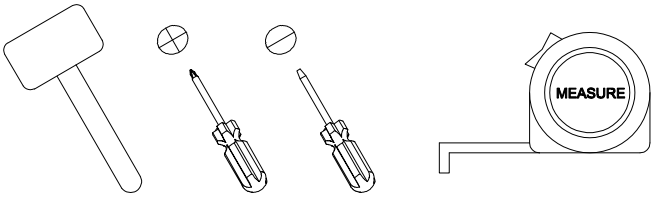

REQUIRED ASSEMBLY TOOLS (NOT PROVIDED)

ASSEMBLED DIMENSION

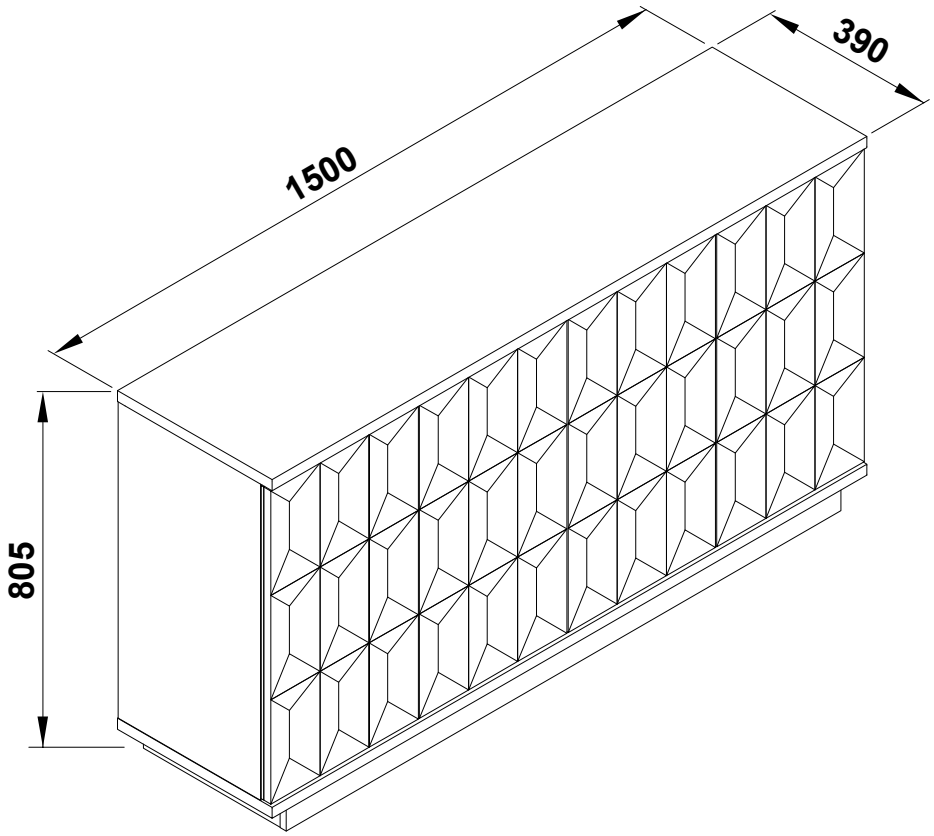

ASSEMBLY INSTRUCTION

DESCRIPTION:
5514
ATMA 4 DOOR SIDEBOARD

WARNING : ENSURE THE WALL STRAP IS ATTACHED TO AVOID SERIOUS INJURY OR DEATH.

To avoid any serious or fatal injury, a wall strap has been provided with this product to prevent toppling. Always secure this product with an anchor device to the wall or suitable surface. Wall fixing hardware are not included since different surface materials require different attachments. Please seek professional advice if you are in doubt of what fixing device to use.

Your product has been provided with a permanent safety label that should never be removed for safety reasons.



For more information please visit www.productsafety.gov.au

ASSEMBLY INSTRUCTION

DESCRIPTION:
5514
ATMA 4 DOOR SIDEBOARD

PART LIST

PACK 1 CONSIST OF
4, 5, 9, 12, 14, 15, 16, 17.
AI AND FITTINGS

PACK 2 CONSIST OF
1, 2, 3, 6, 7, 8, 10, 11, 13.

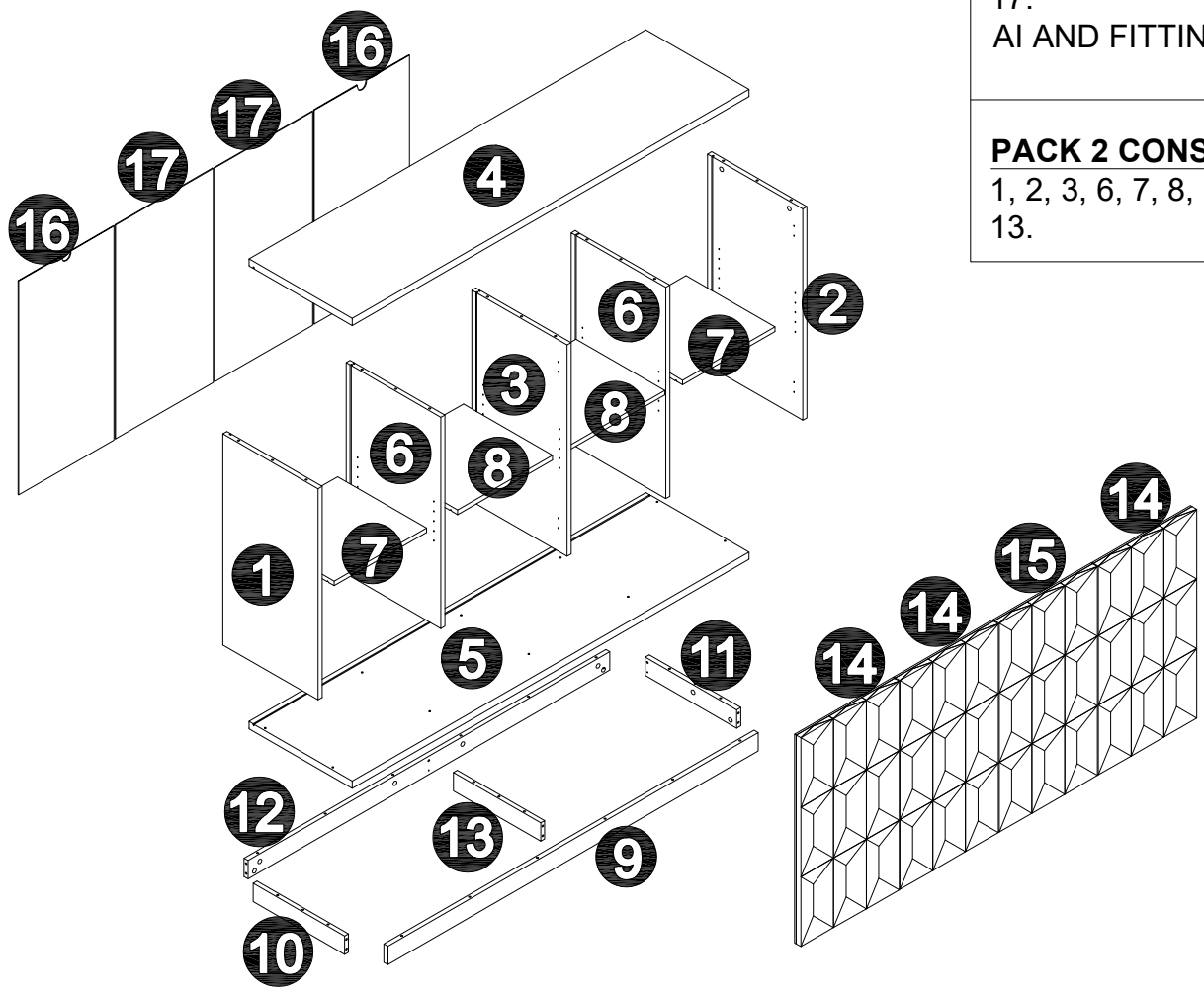

NO.	PARTS LIST	QTY	NO.	PARTS LIST	QTY
(1)	PART 1	1	(11)	PART 11	1
(2)	PART 2	1	(12)	PART 12	1
(3)	PART 3	1	(13)	PART 13	1
(4)	PART 4	1	(14)	PART 14	3
(5)	PART 5	1	(15)	PART 15	1
(6)	PART 6	2	(16)	PART 16	2
(7)	PART 7	2	(17)	PART 17	2
(8)	PART 8	2			
(9)	PART 9	1			
(10)	PART 10	1			

ASSEMBLY INSTRUCTION

DESCRIPTION:
5514
ATMA 4 DOOR SIDEBOARD

HARDWARE LIST

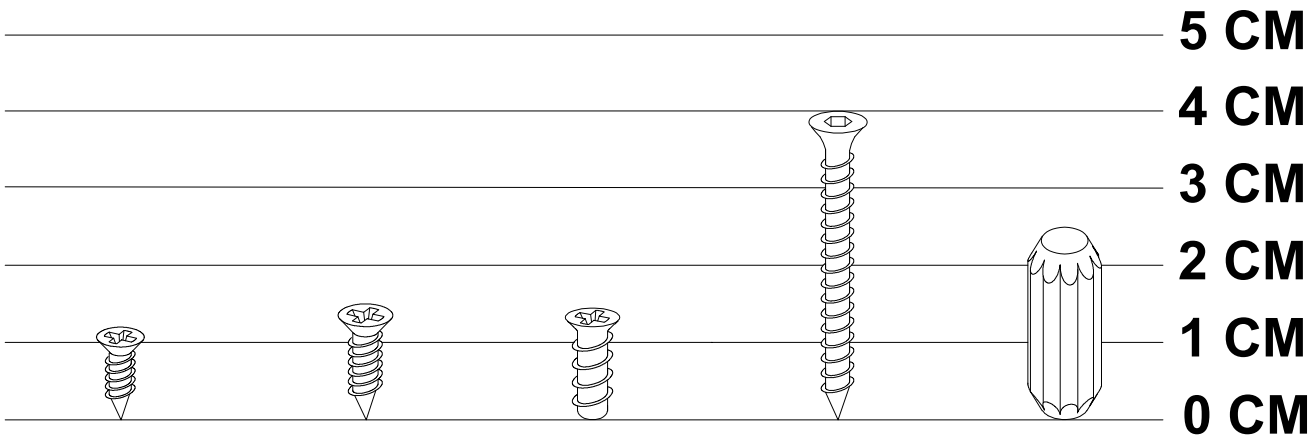

X8
M3.5 X 12MM
A
SCREW

X34
M3.5 X 15MM
B
SCREW

X16
M6 X 13MM
C
SCREW

X10
M6 X 40MM
D
SCREW

X21
Ø8 X 25MM
E
WOOD DOWEL

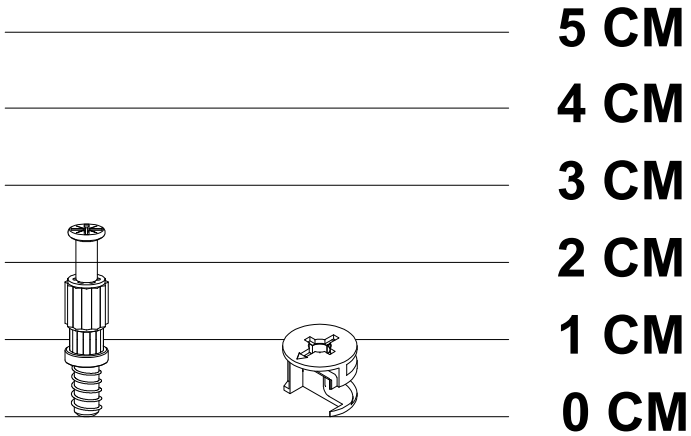

X27
20 X 5MM
F
BOLT DOWEL

X27
Ø15 X 12MM
G
CAM

ASSEMBLY INSTRUCTION

DESCRIPTION:
5514
ATMA 4 DOOR SIDEBOARD

HARDWARE LIST



X4

H

WASHER (M5)

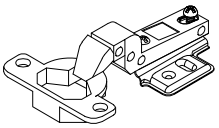

X4 SETS

J

METAL SOFT CLOSING HINGES (2/8") THIN CUP

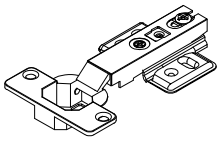

X4 SETS

K

METAL SOFT CLOSING HINGES (5/8") SLIDE

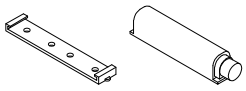

X4 SETS

L

2011 PUSH OPEN FOR DOOR

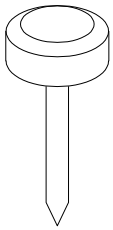

X6

M

PLASTIC LEG STUD

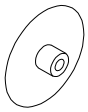

X10

N

PLASTIC CAM CAP (Ø17MM)

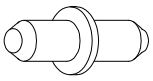

X16

P

METAL ADJUSTABLE SHELF STUD

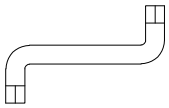

X1

Q

ALLEN KEY M4

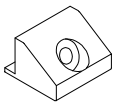

X16

R

BACKPLY STOPPER

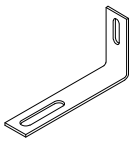

X2

S

STEEL L BRACKET (BZ) 1.5 X 76.5

ASSEMBLY INSTRUCTION

DESCRIPTION:
5514
ATMA 4 DOOR SIDEBOARD

Top Tips before you start!

1. Please check that all parts are present before you start the assembly of your furniture, as once assembled, the furniture is exempt from our home approval policy.

2. For ease and speed of assembly, we recommend that before you commence each step of the assembly, that you identify all the parts required for the step.

3. For larger items, please ensure that you have sufficient space and people (as indicated on page 1) to assemble your product safely.

4. We recommend that, where possible, all items are assembled near to the area in which they will be placed in use, to avoid moving the product unnecessarily once assembled.

5. For the protection of your furniture, particularly items of high gloss finish, we recommend that the product is placed on a protected surface during assembly to prevent any damage.

6. During assembly please take care not to over-tighten any fittings, as this may damage the product.

Care and Maintenance of your Furniture

- Please periodically check all fittings and re-tighten as necessary.
- Please do not drag or pull your furniture.
- Wipe occasionally with a soft cloth slightly dampened with water. Then buff with a dry clean soft cloth.
- Never allow any kind of liquid to remain on your furniture. Absorption can cause wood to warp or finishes to de-laminate.
- Please do not sit or stand on this item.

Special Tips for Fitting Minifix Cam (Cam-Lock), and Minifix Bolt (Cam-Bolts)

CAM-BOLT

Tighten until shoulder is flush with panel. Do not overtighten or undertighten (see example below).

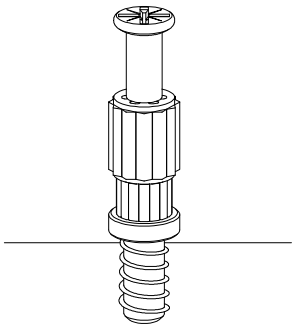

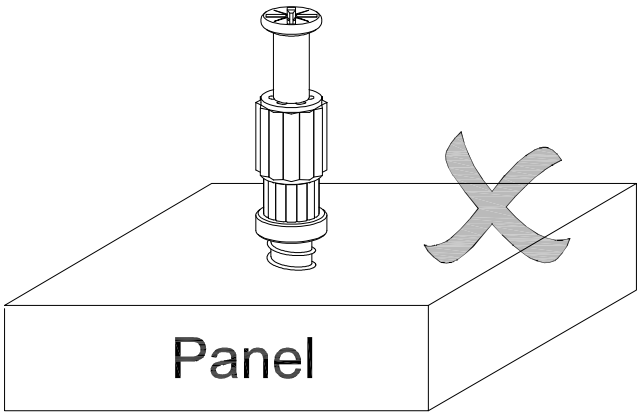

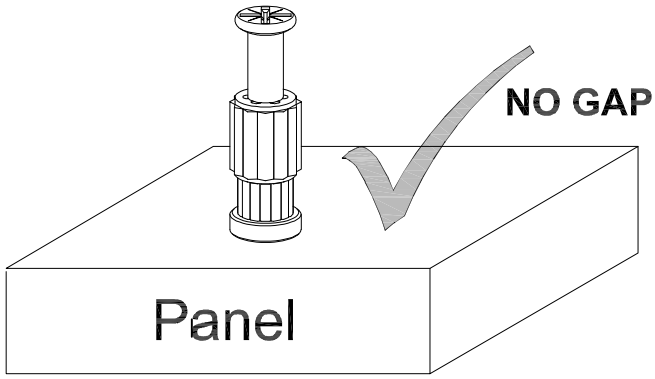

CAM-LOCK

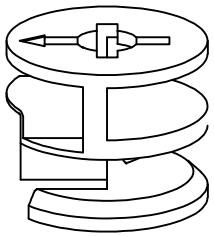

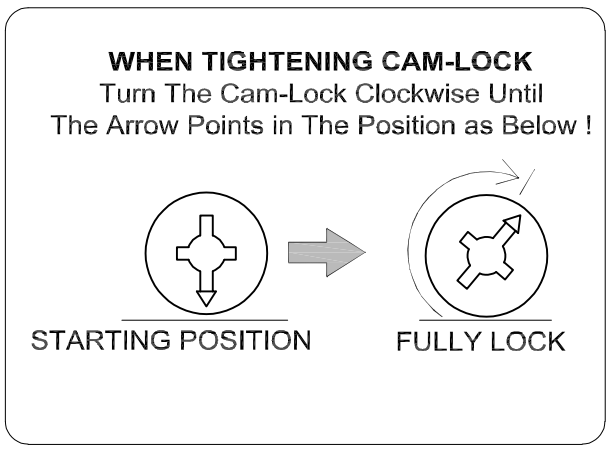

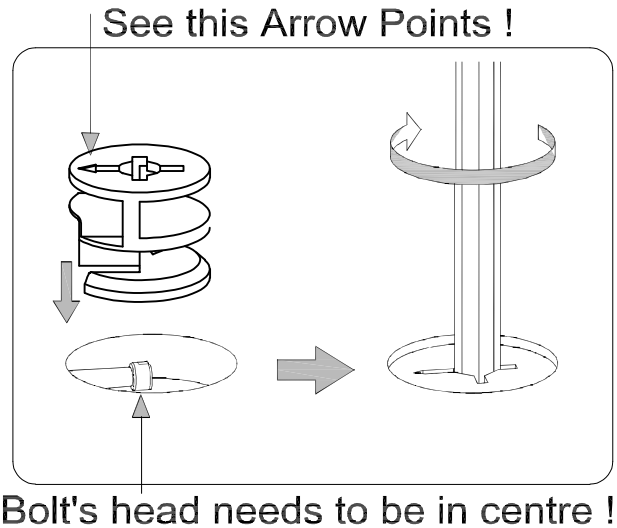

ASSEMBLY INSTRUCTION

DESCRIPTION:
5514
ATMA 4 DOOR SIDEBOARD

STEP 1

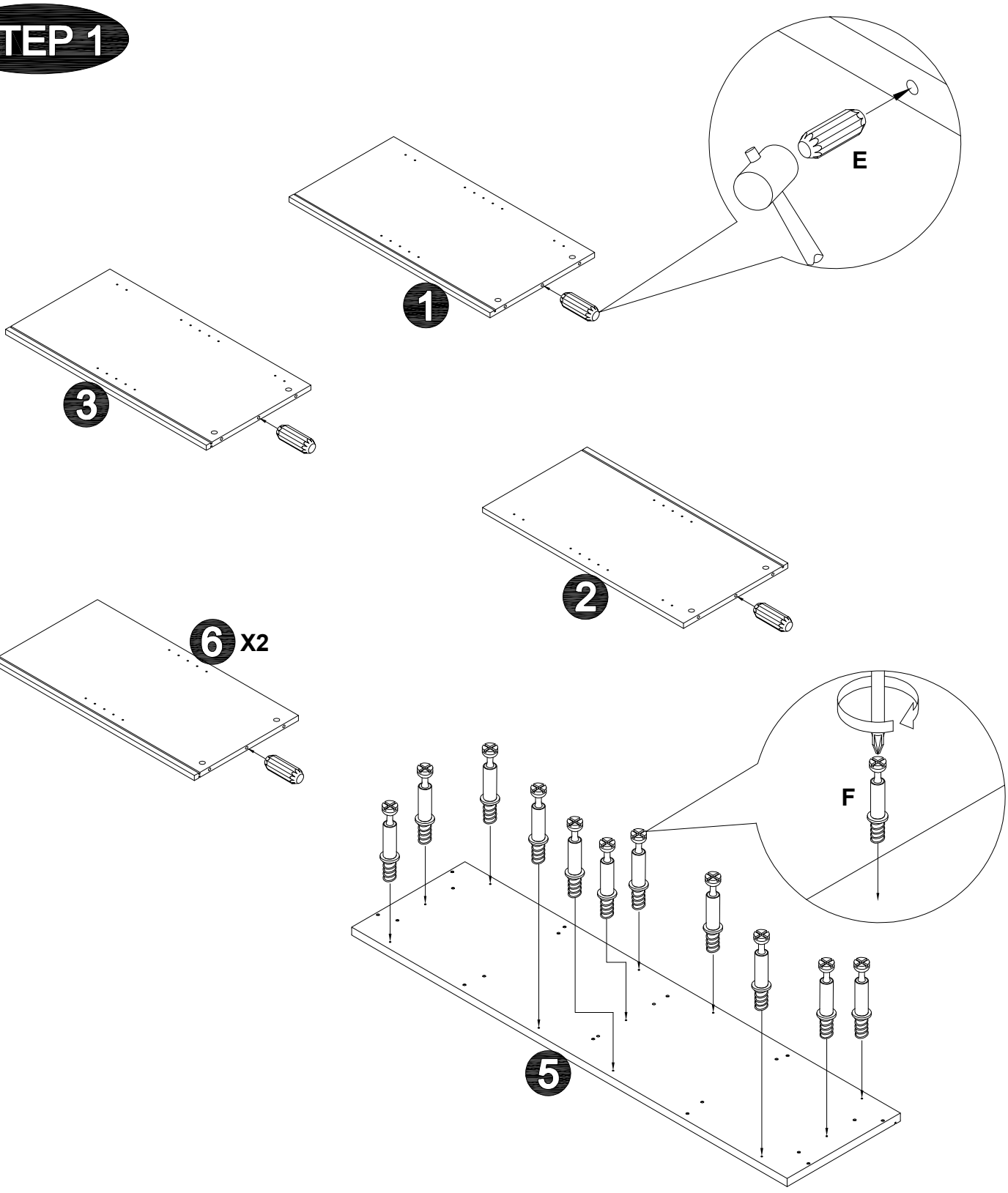

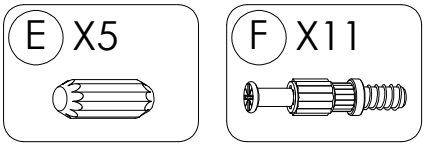

ASSEMBLY INSTRUCTION

DESCRIPTION:
5514
ATMA 4 DOOR SIDEBOARD

STEP 2

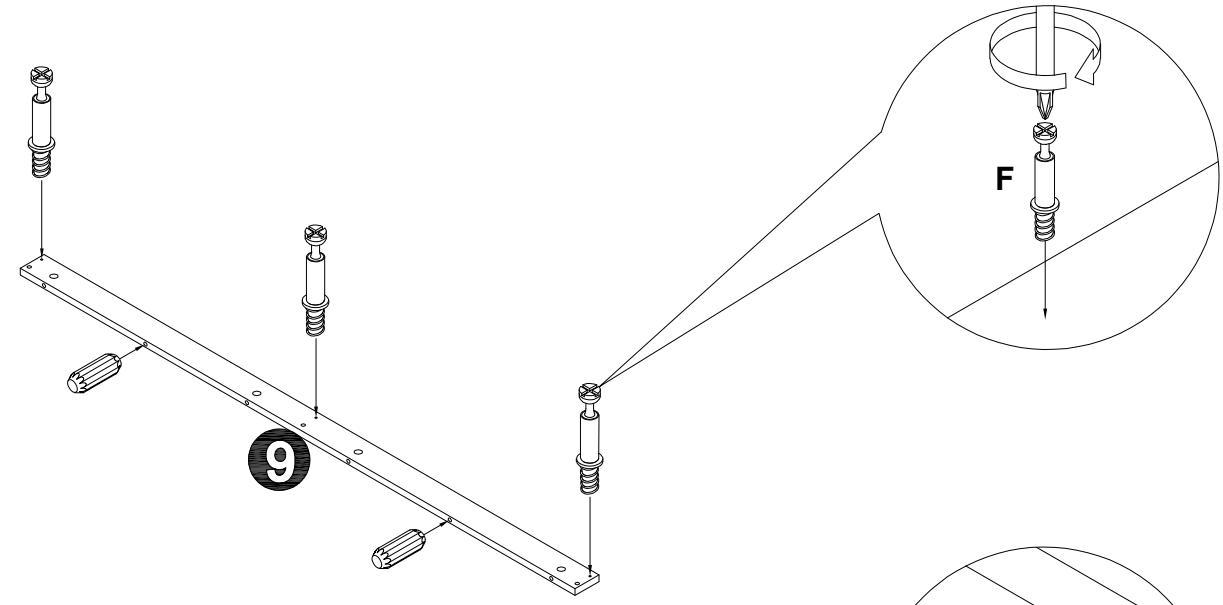

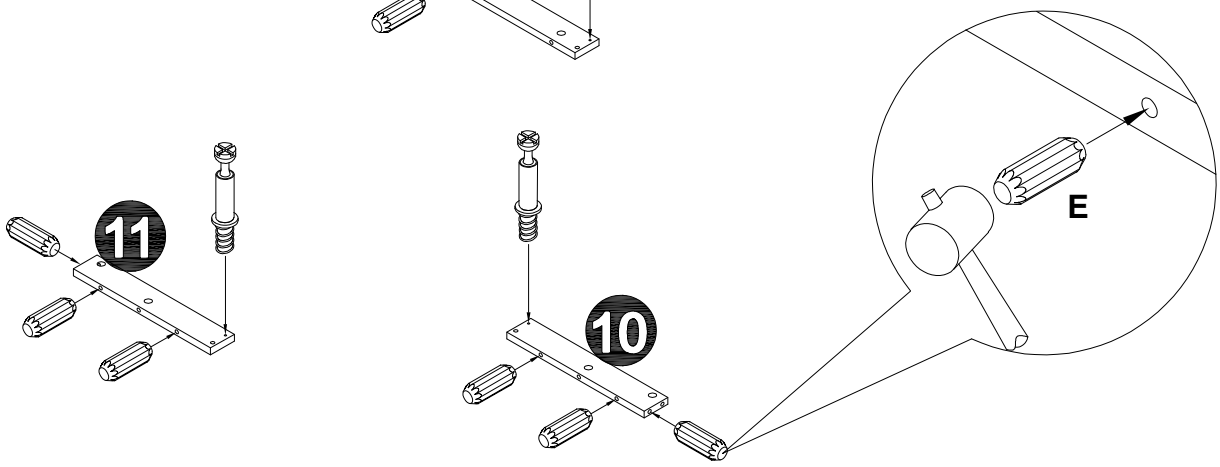

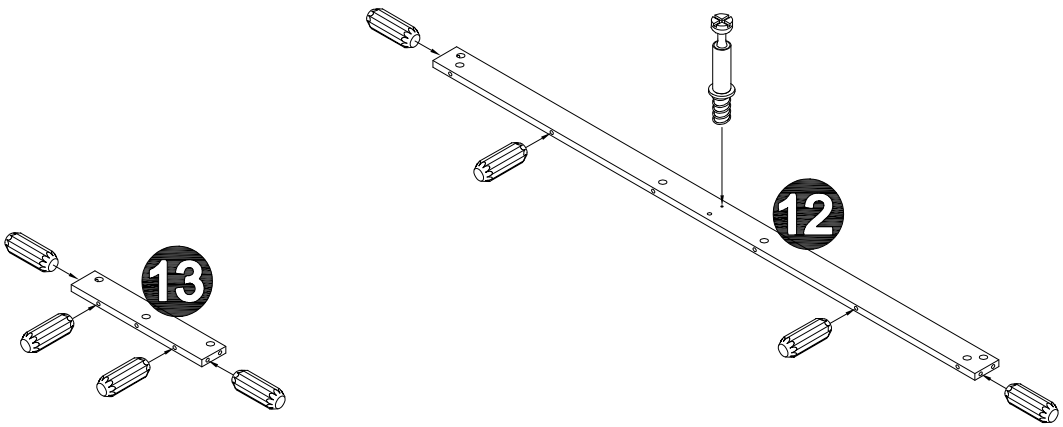

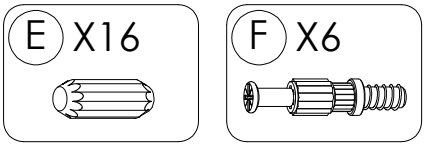

ASSEMBLY INSTRUCTION

DESCRIPTION:
5514
ATMA 4 DOOR SIDEBOARD

STEP 3

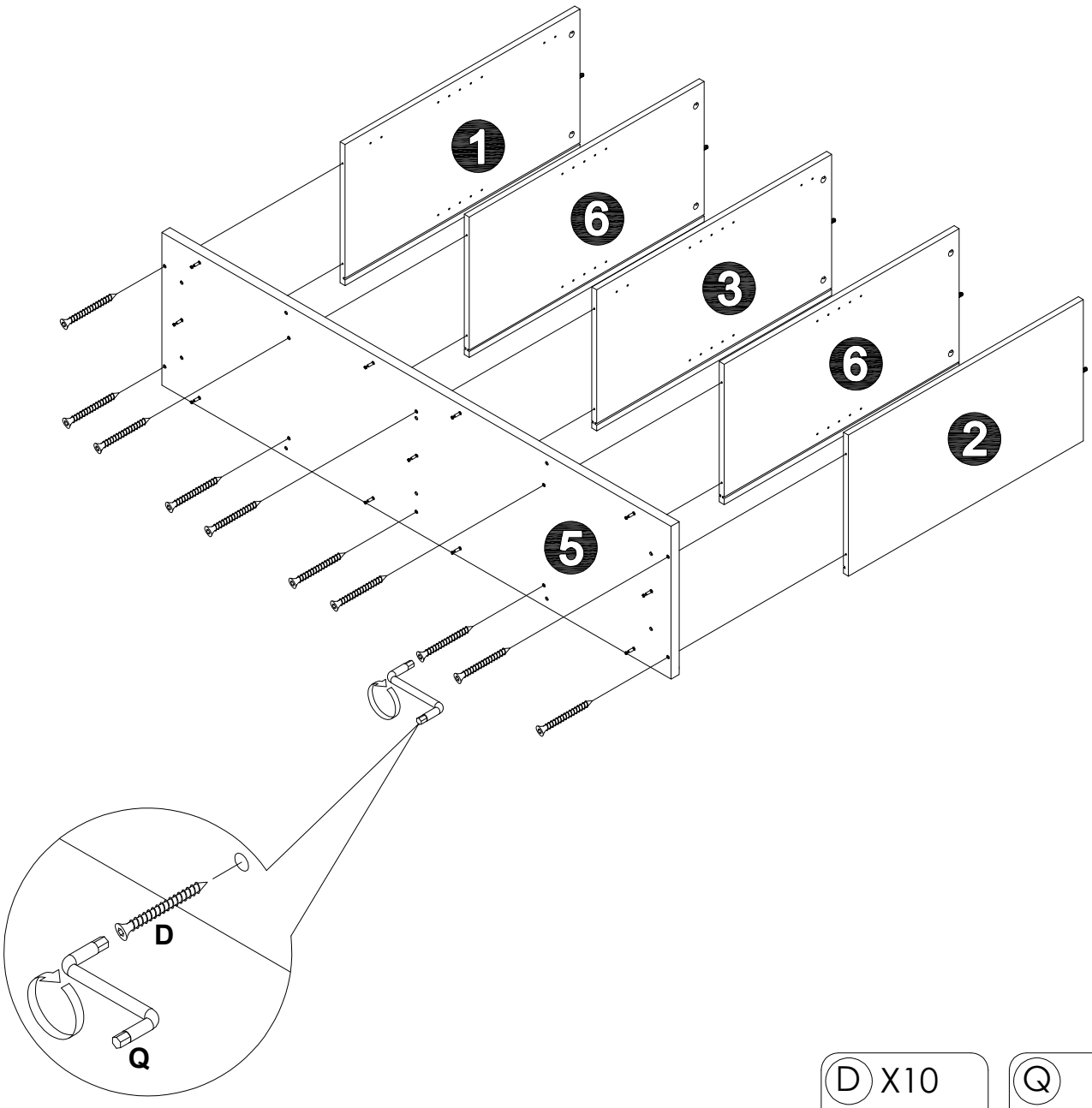

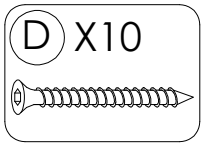

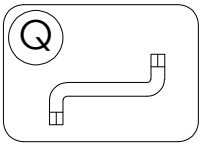

ASSEMBLY INSTRUCTION

DESCRIPTION:
5514
ATMA 4 DOOR SIDEBOARD

STEP 4

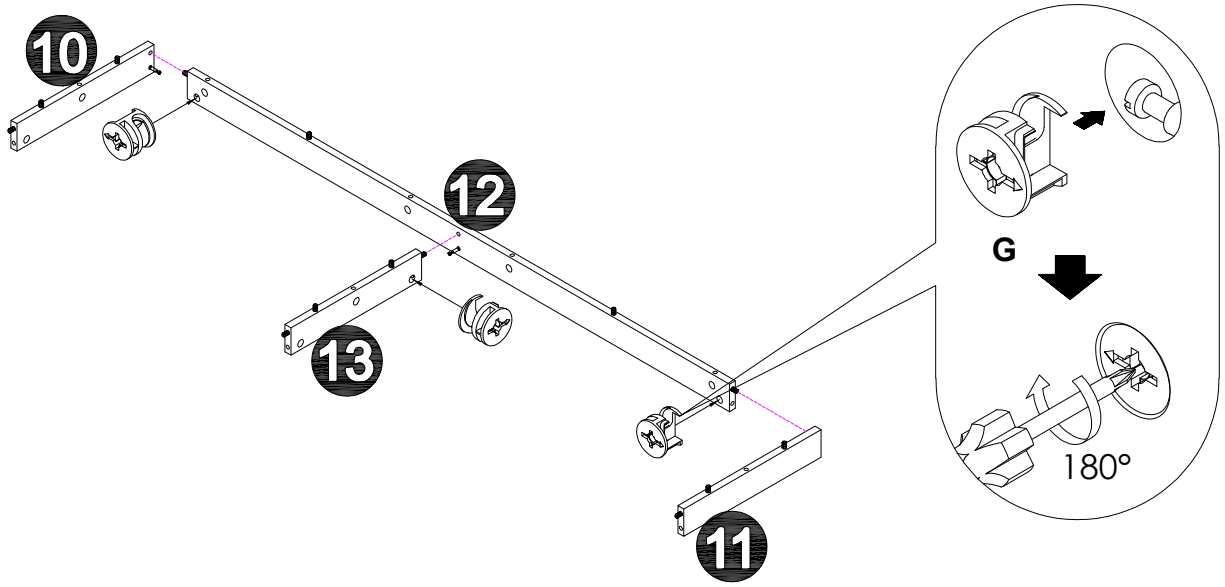

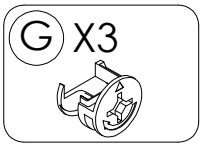

STEP 5

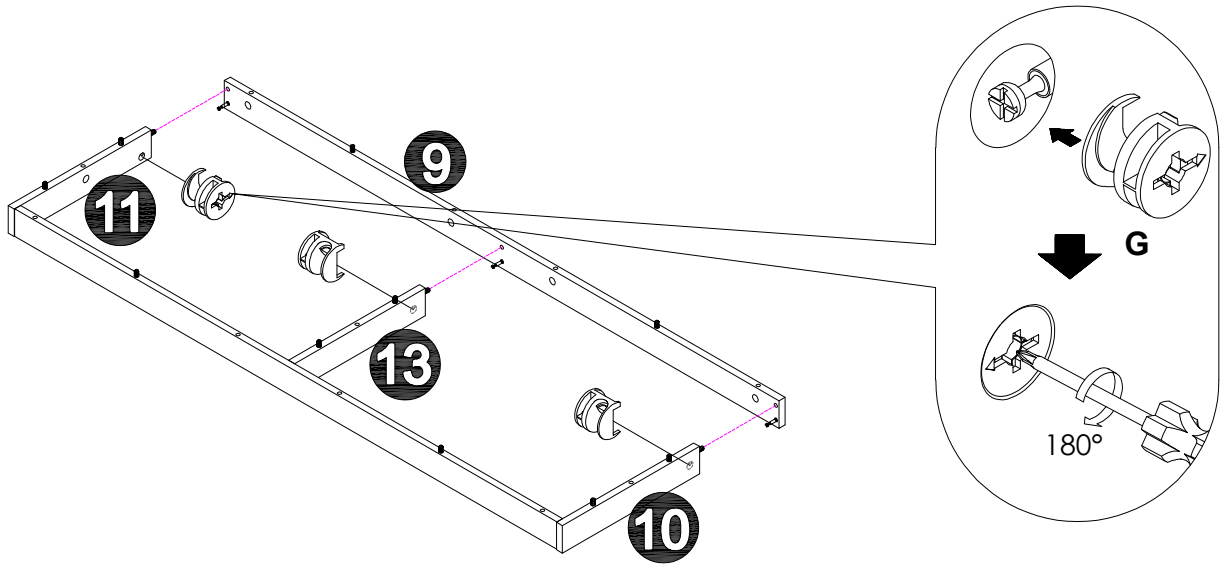

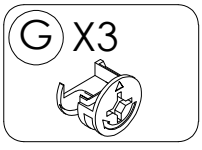

ASSEMBLY INSTRUCTION

DESCRIPTION:
5514
ATMA 4 DOOR SIDEBOARD

STEP 6

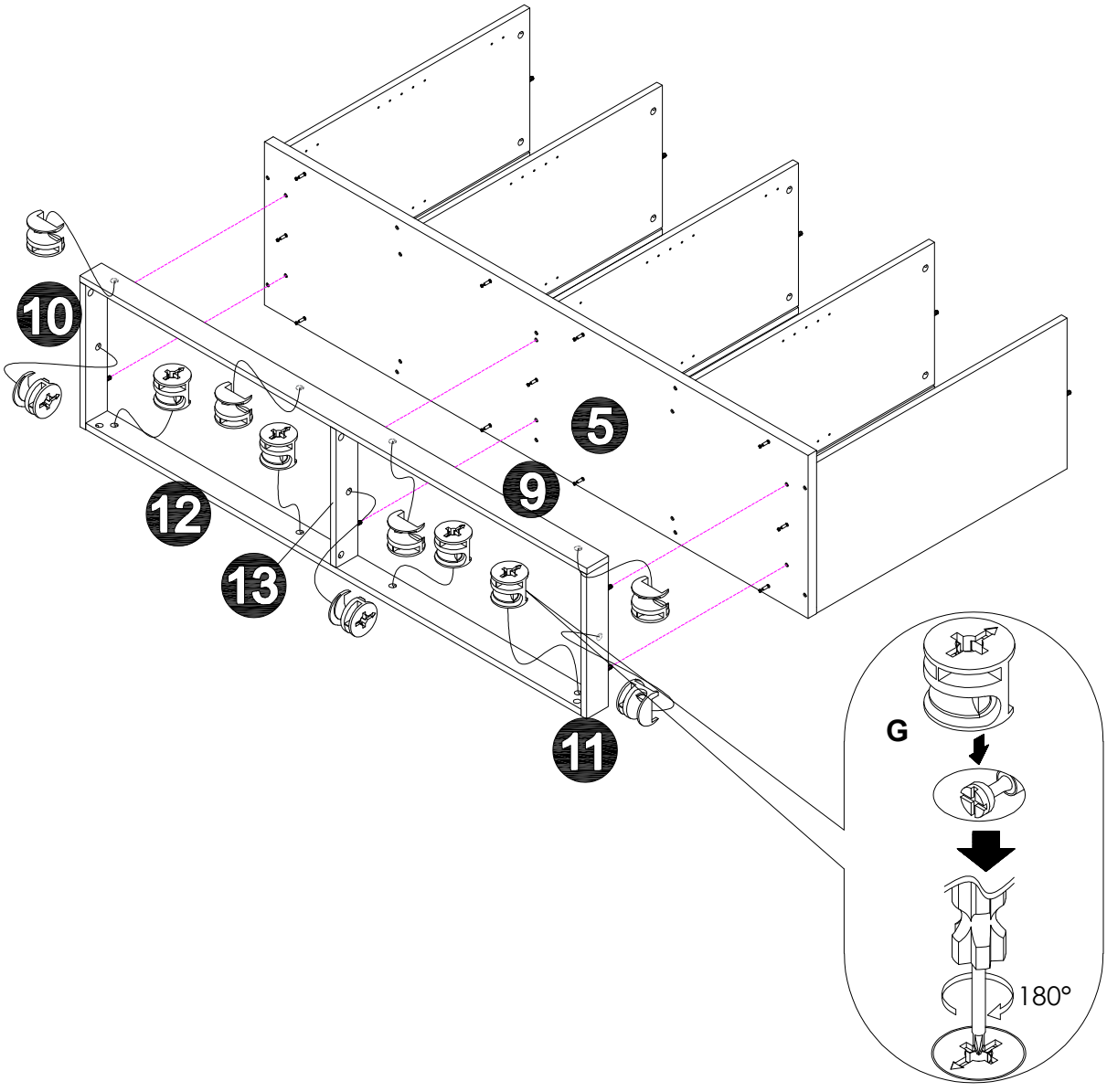

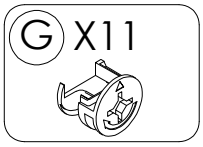

ASSEMBLY INSTRUCTION

DESCRIPTION:
5514
ATMA 4 DOOR SIDEBOARD

STEP 7

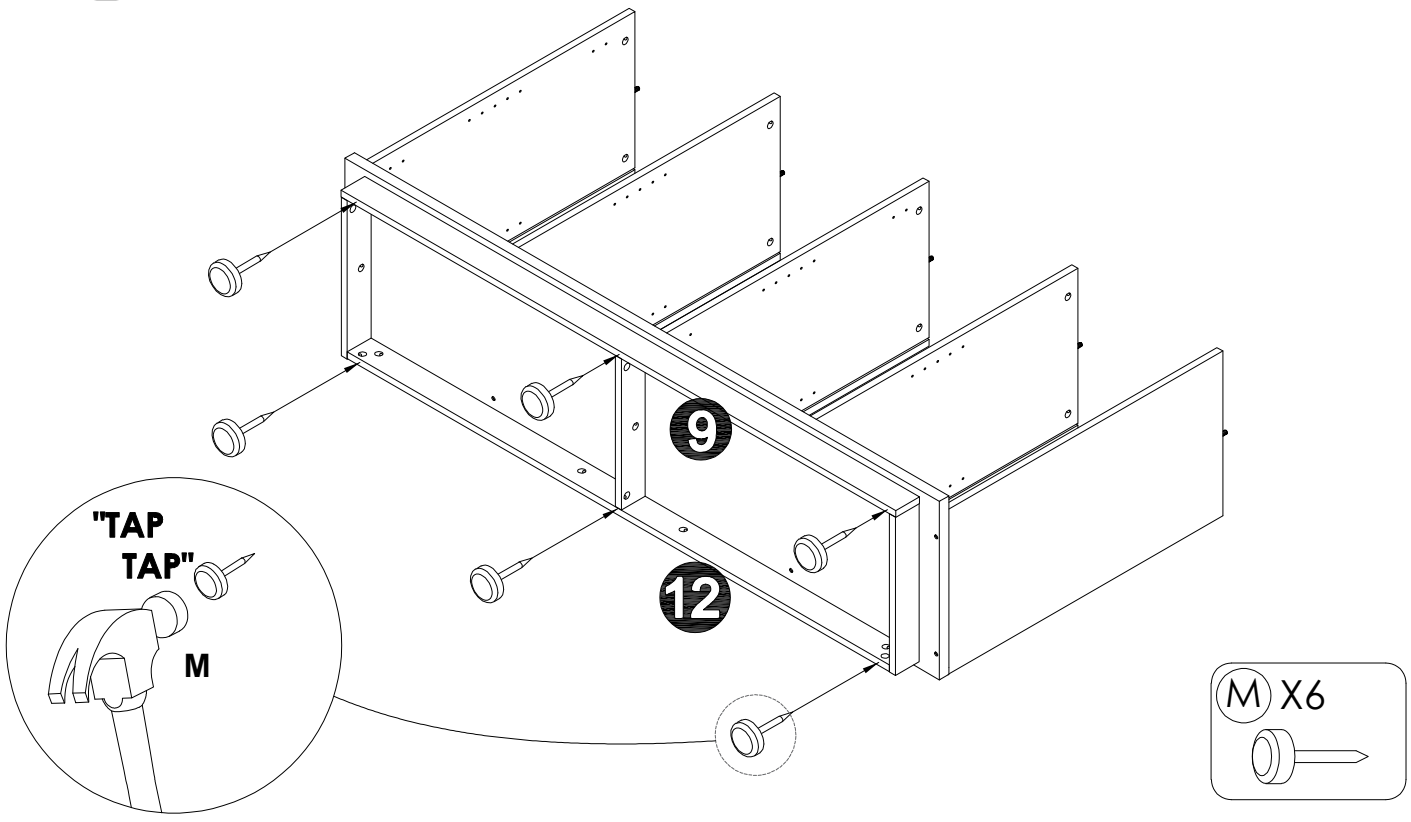

STEP 8

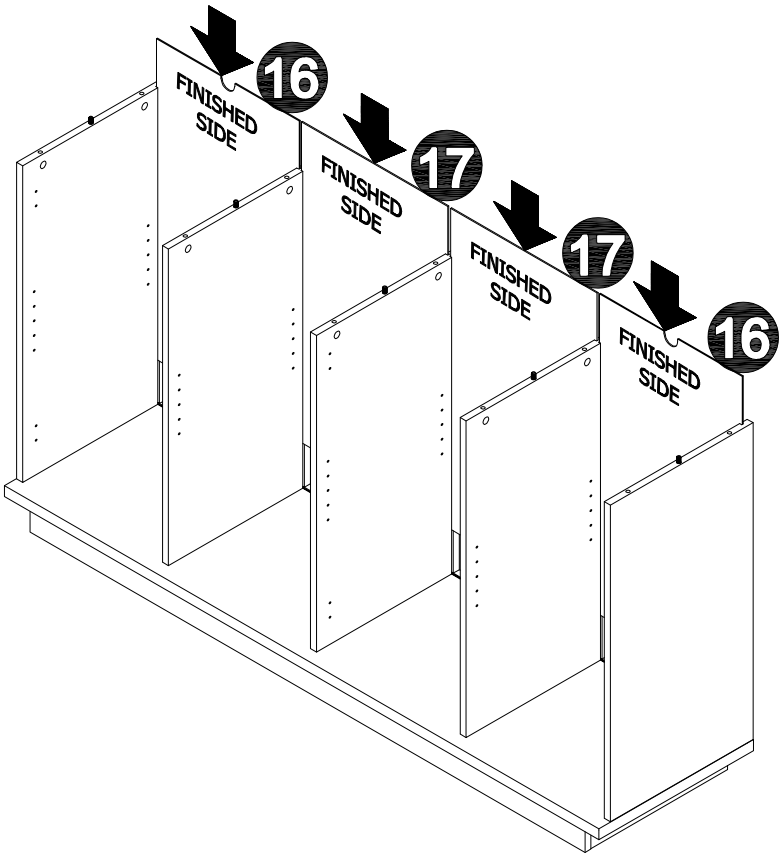

ASSEMBLY INSTRUCTION

DESCRIPTION:
5514
ATMA 4 DOOR SIDEBOARD

STEP 9

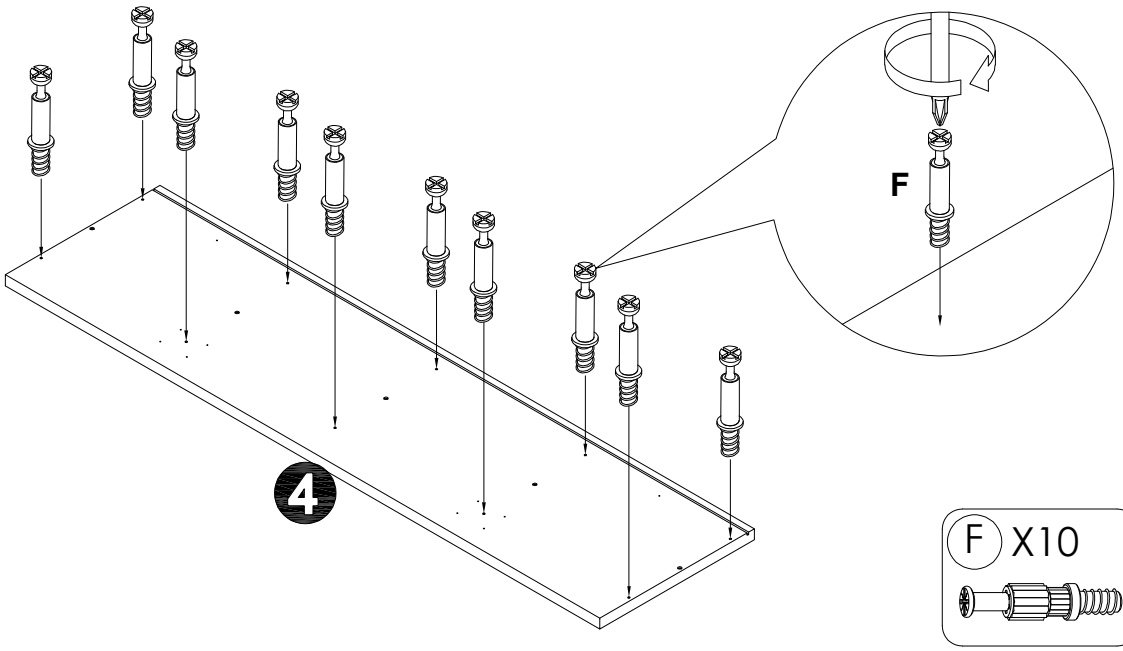

F X10

STEP 10

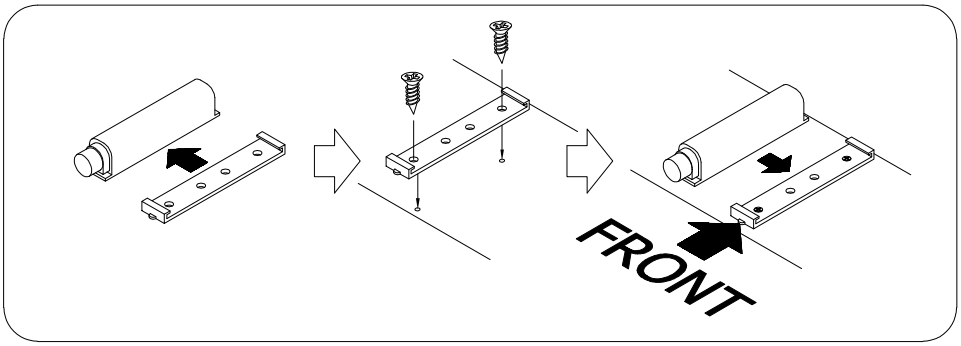

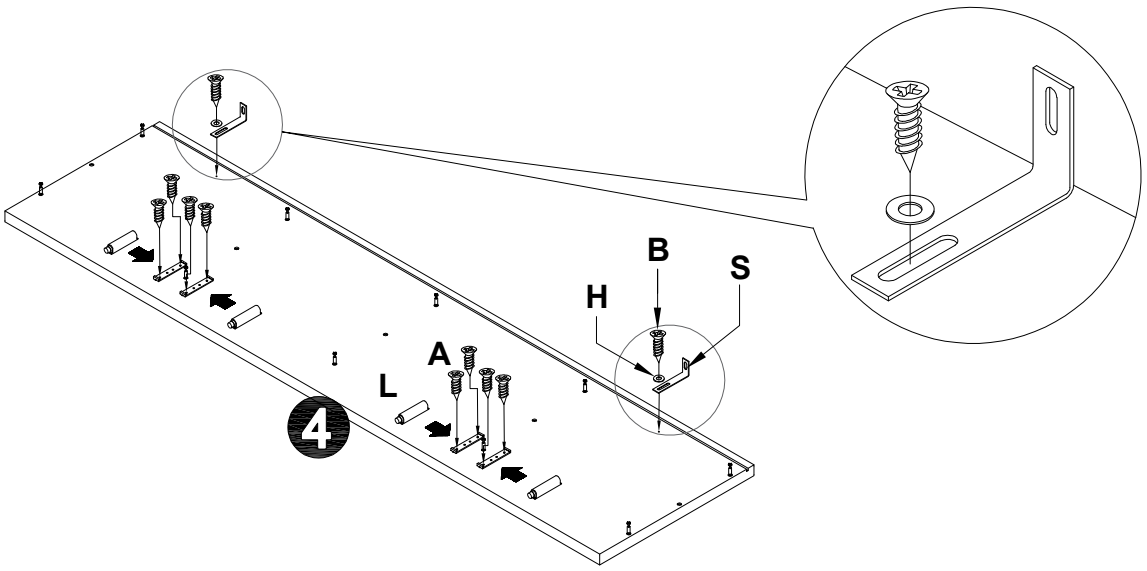

A X8



B X2



H X2



L X4

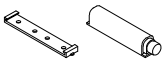

S X2



ASSEMBLY INSTRUCTION

DESCRIPTION:
5514
ATMA 4 DOOR SIDEBOARD

STEP 11

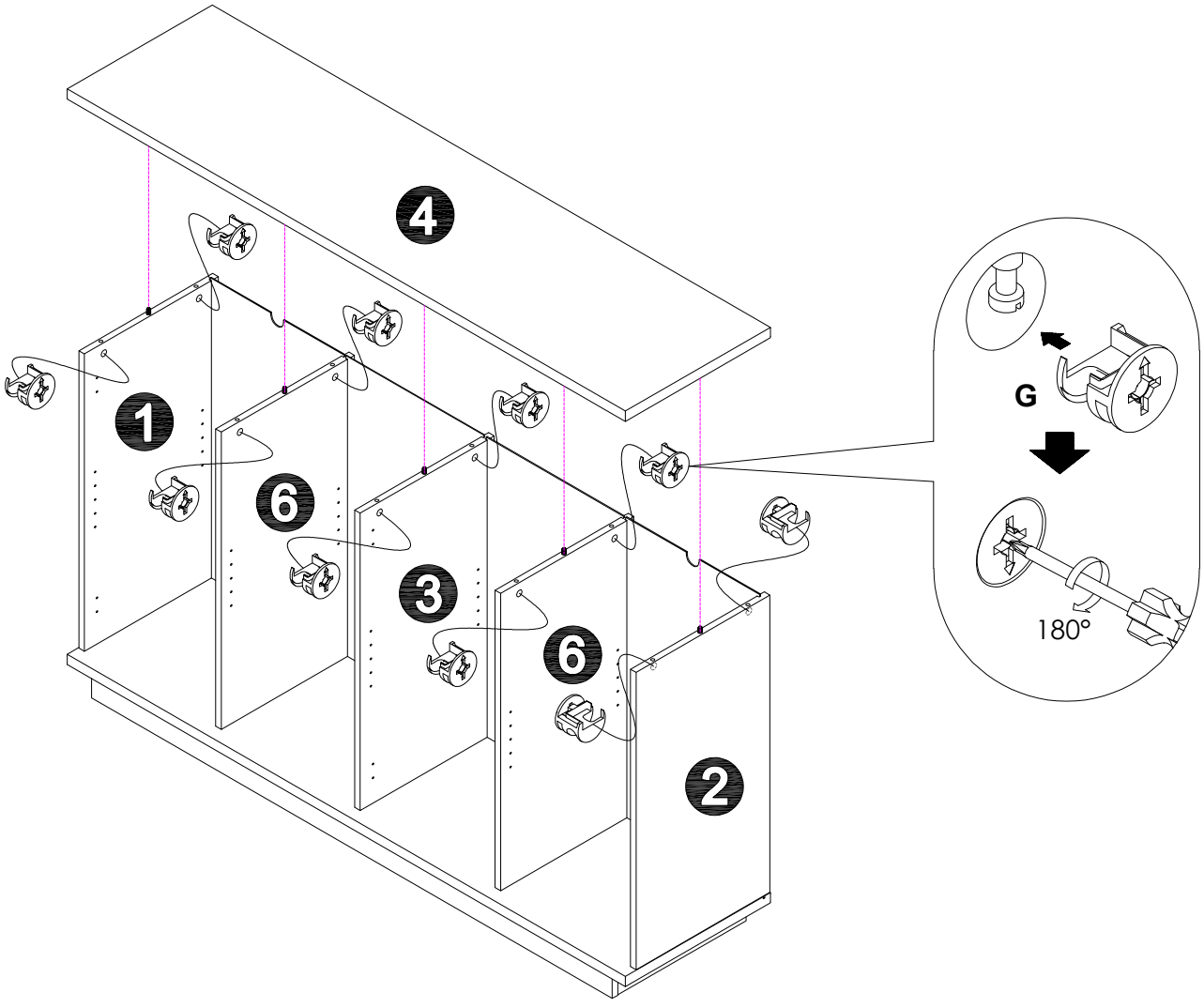

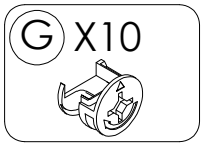

ASSEMBLY INSTRUCTION

DESCRIPTION:
5514
ATMA 4 DOOR SIDEBOARD

STEP 12

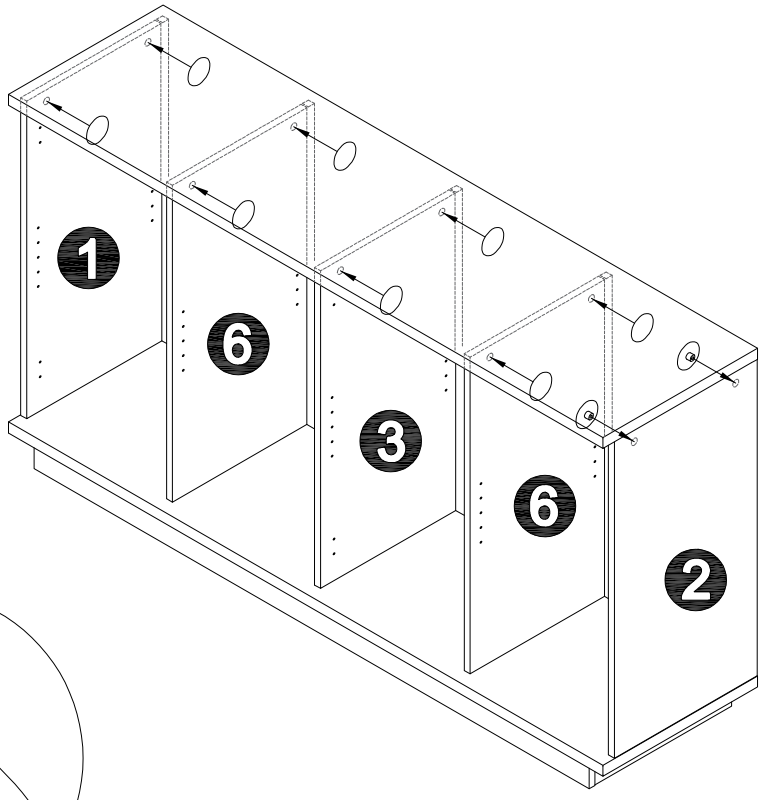

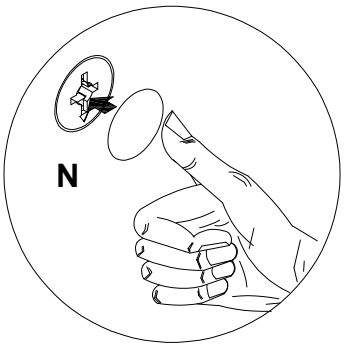

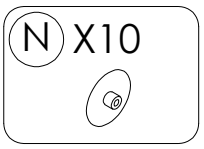

ASSEMBLY INSTRUCTION

DESCRIPTION:
5514
ATMA 4 DOOR SIDEBOARD

STEP 13

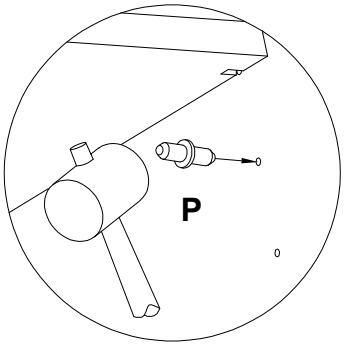

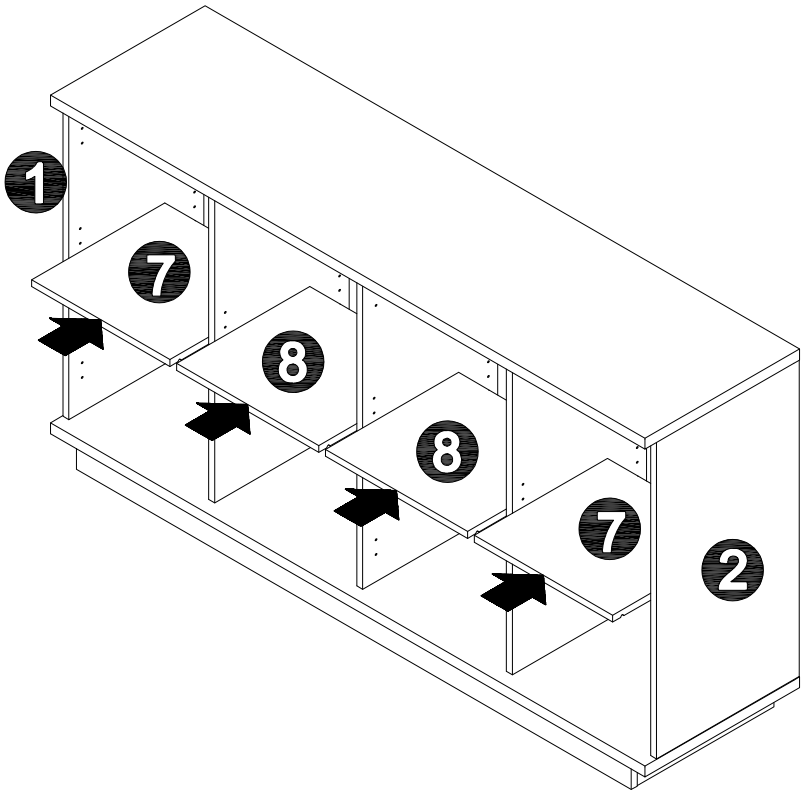

P X16

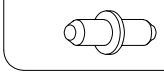

STEP 14

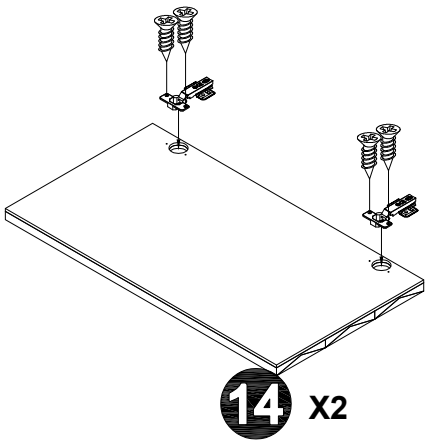

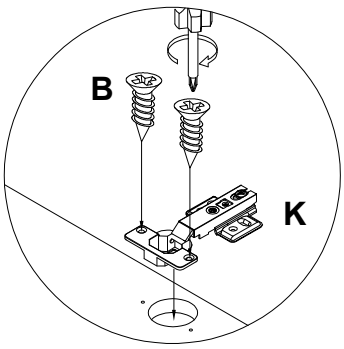

B X8



K X4

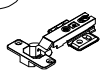

ASSEMBLY INSTRUCTION

DESCRIPTION:
5514
ATMA 4 DOOR SIDEBOARD

STEP 15

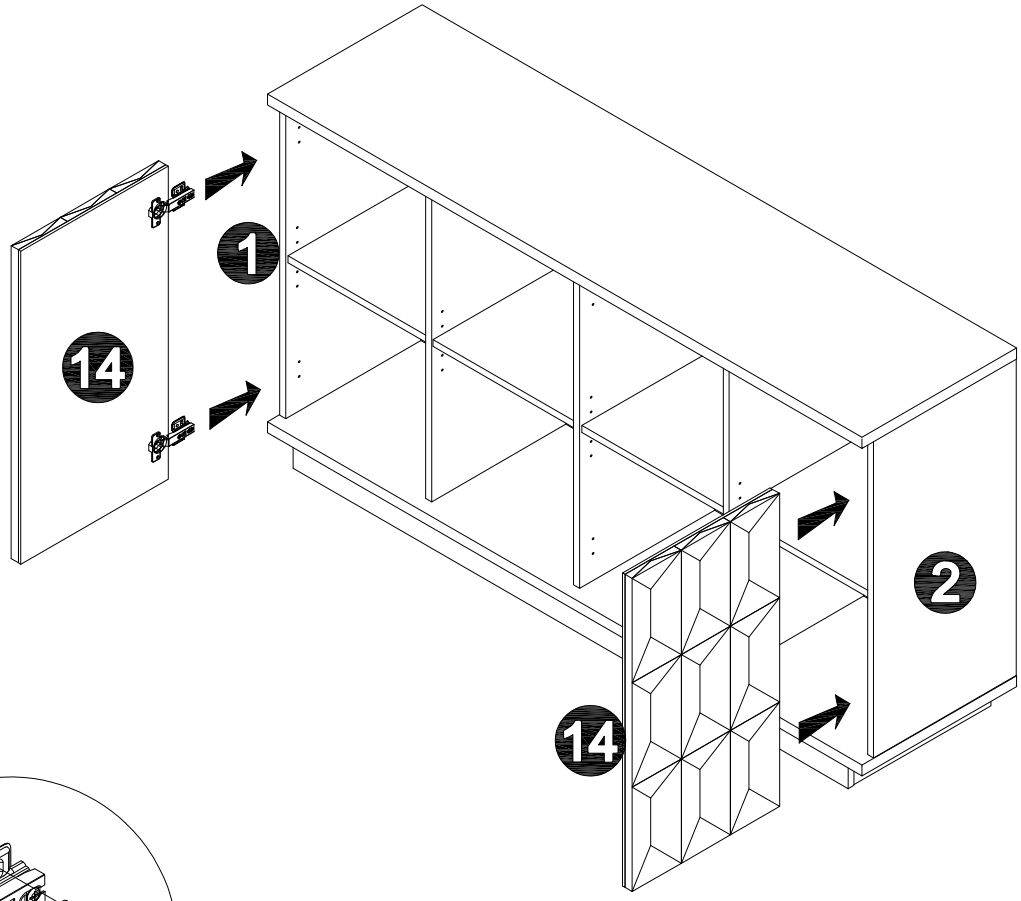

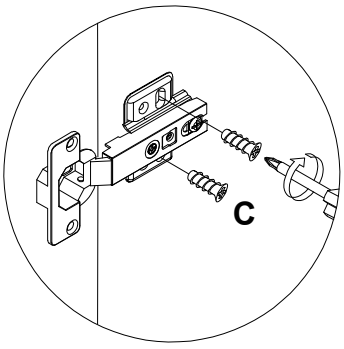

HINGE ADJUSTMENT GUIDE

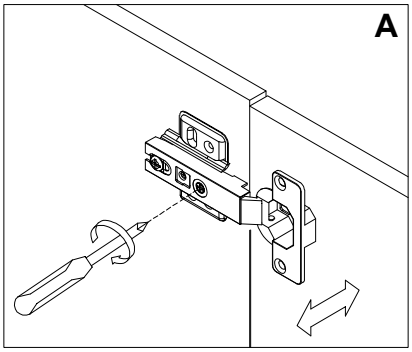

A. Lateral adjustment by screw adjusting

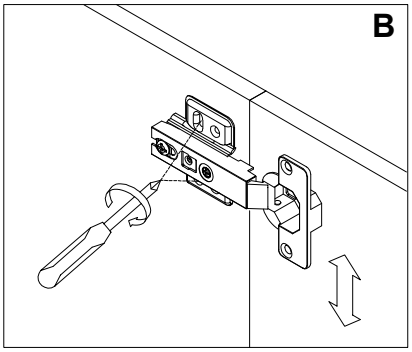

B. Vertical adjustment via slot in the mounting plate

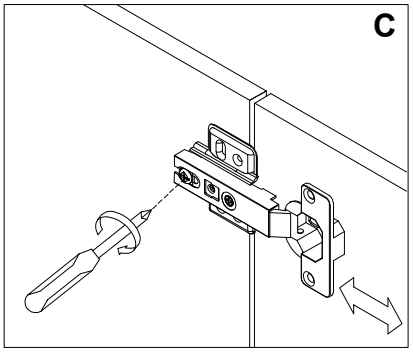

C. Front-to-Back by the slacking the hinge arm mounting screw

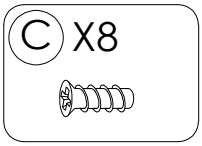

ASSEMBLY INSTRUCTION

DESCRIPTION:
5514
ATMA 4 DOOR SIDEBOARD

STEP 16

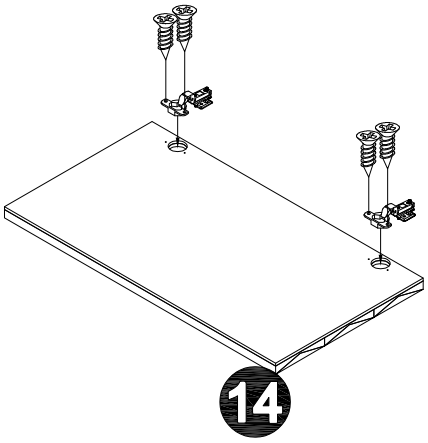

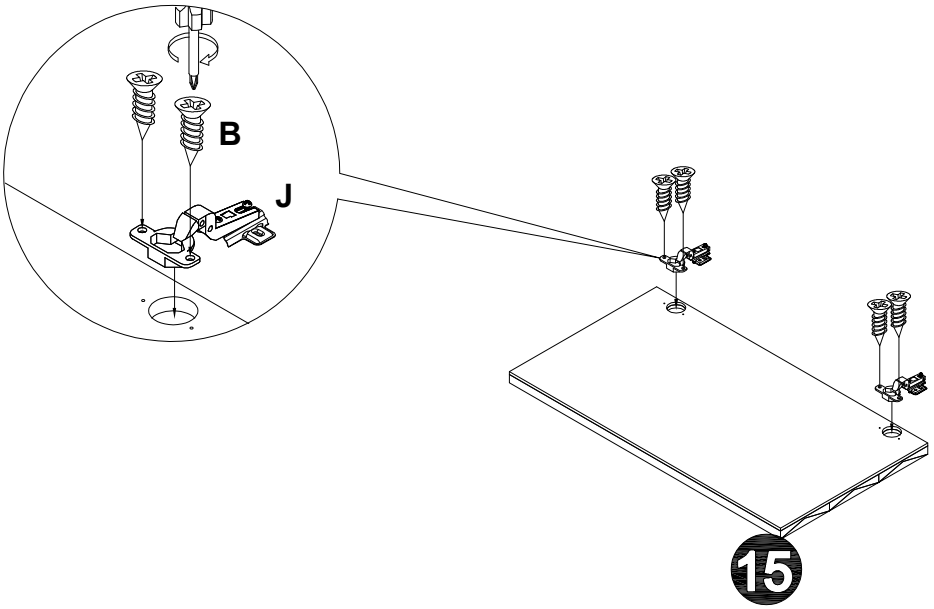

B X8



J X4

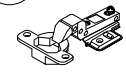

ASSEMBLY INSTRUCTION

DESCRIPTION:
5514
ATMA 4 DOOR SIDEBOARD

STEP 17

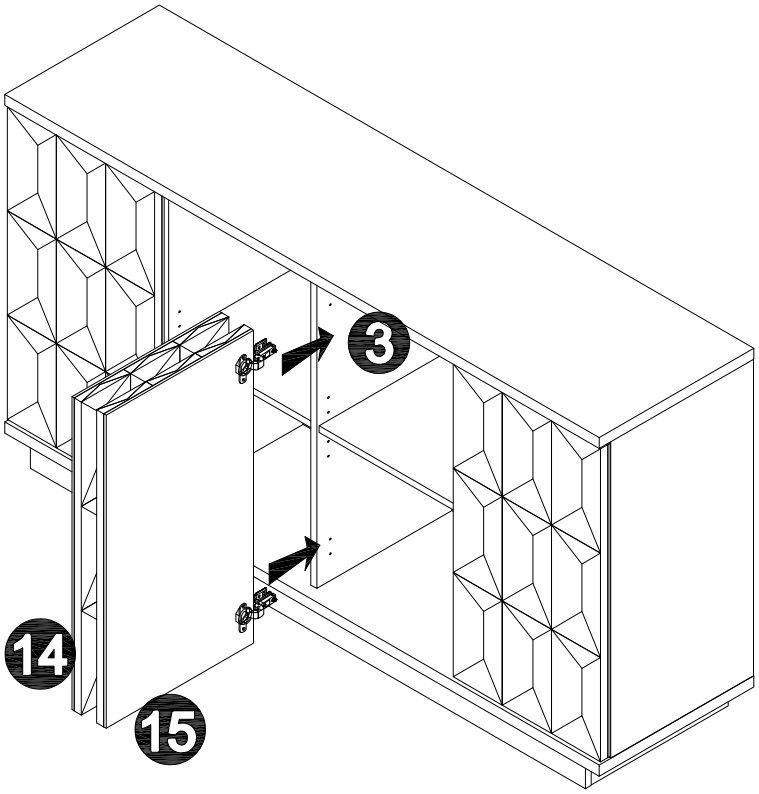

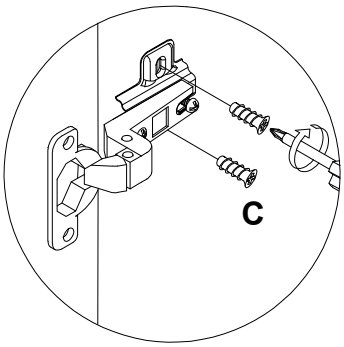

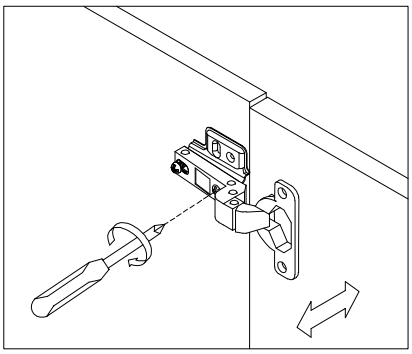

A. Lateral adjustment by screw adjusting

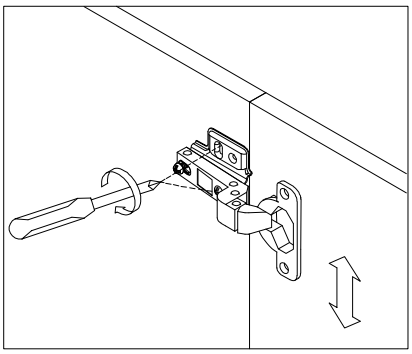

B. Vertical adjustment via slot in the mounting plate

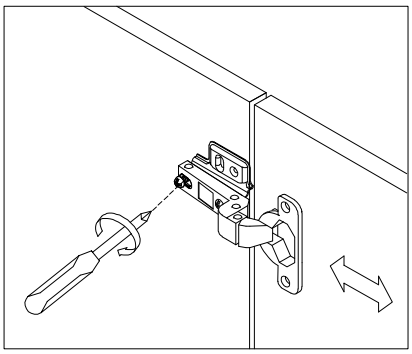

C. Front-to-Back by the slacking the hinge arm mounting screw

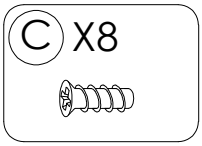

ASSEMBLY INSTRUCTION

DESCRIPTION:
5514
ATMA 4 DOOR SIDEBOARD

STEP 18

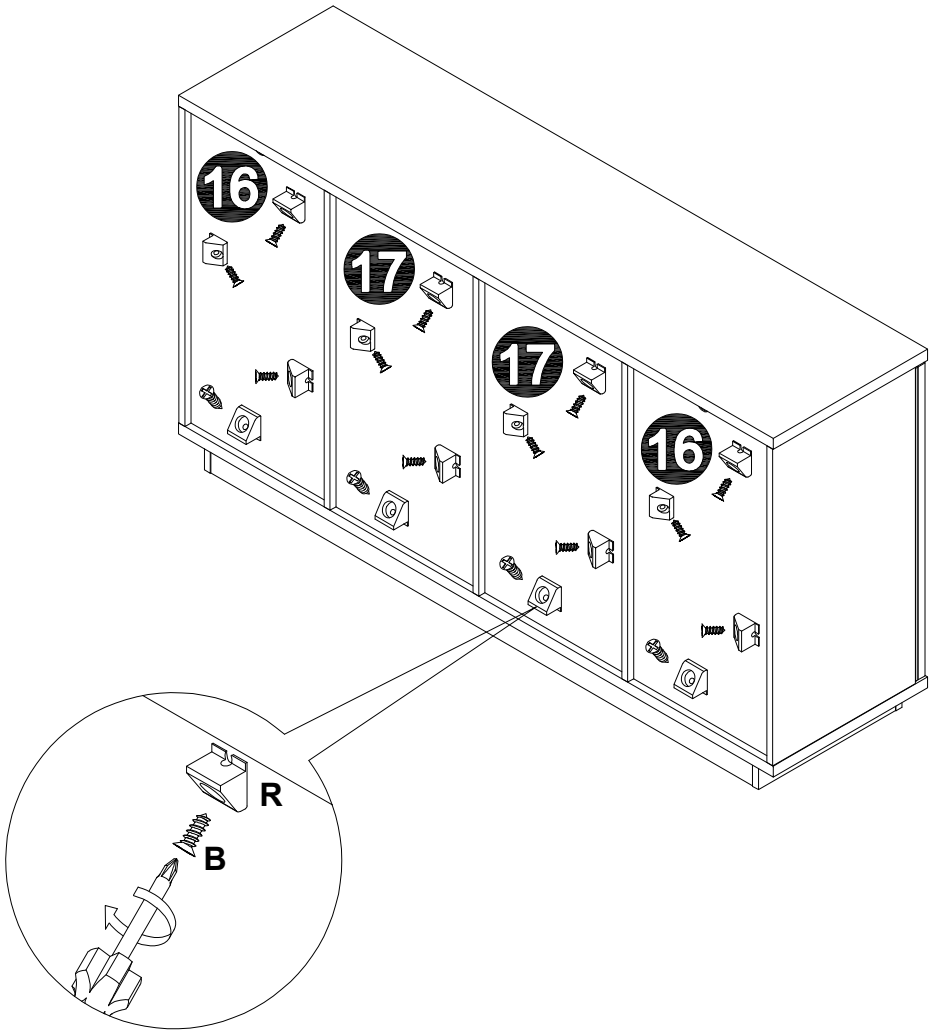

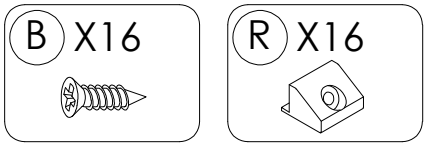

ASSEMBLY INSTRUCTION

DESCRIPTION:
5514
ATMA 4 DOOR SIDEBOARD

STEP 19

DIFFERENT WALL MATERIAL REQUIRE DIFFERENT TYPES OF FIXING DEVICES. USE FIXING DEVICES SUITABLE FOR THE WALLS IN YOUR HOME, SOLD SEPARATELY. PLEASE SEEK PROFESSIONAL ADVICE IF YOU ARE IN DOUBT OF WHAT FIXING SHOULD BE USE..



WARNING, PLEASE READ TO Reduce the risk to toppling furniture

- NEVER open more than one drawer at the time.
- NEVER allow children to stand, climb or hang on furniture. It may topple and cause serious injury or death.
- Do not place toys or other child appealing items on top of this furniture.
- ALWAYS anchor this product to a wall or other suitable surface. check anchors regularly.
- Place heavy items in lower drawers
- Use of anti toppling restraints may only reduce, but will not eliminate the risk to tip over.

NEVER put a TV on this product.
For more information please visit www.productsafety.gov.au

Screw and wall plugs are not provided, please use appropriate fixtures for your wall.

WALL

