# ASSEMBLY INSTRUCTION

## DESCRIPTYION
## 6005OAK
## Byron Bedside Table

**1.0hr**

APPROXIMATE ASSEMBLY TIME

2 PERSON ASSEMBLY

**FLOOR AREA**
**2MX2M**

REQUIRED ASSEMBLY SPACE

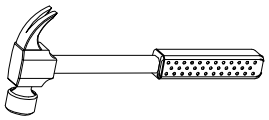

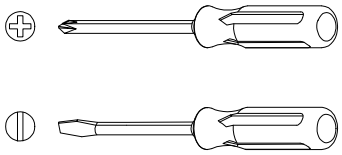

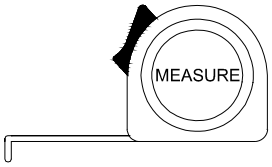


REQUIRED ASSEMBLY TOOLS

ASSEMBLED DIMENSIONS

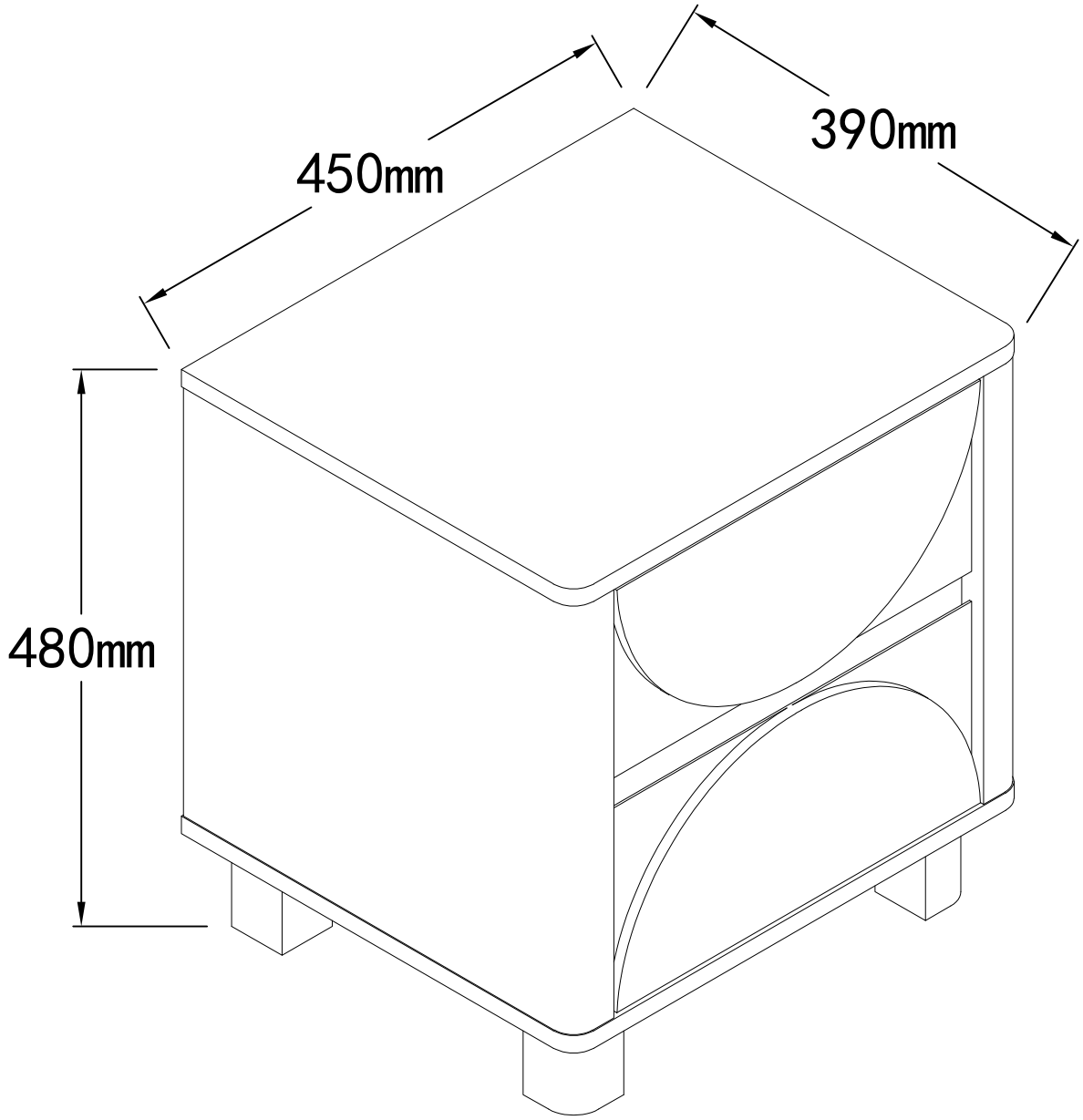

# ASSEMBLY INSTRUCTION

## DESCRIPTYION
## 6005OAK
## Byron Bedside Table

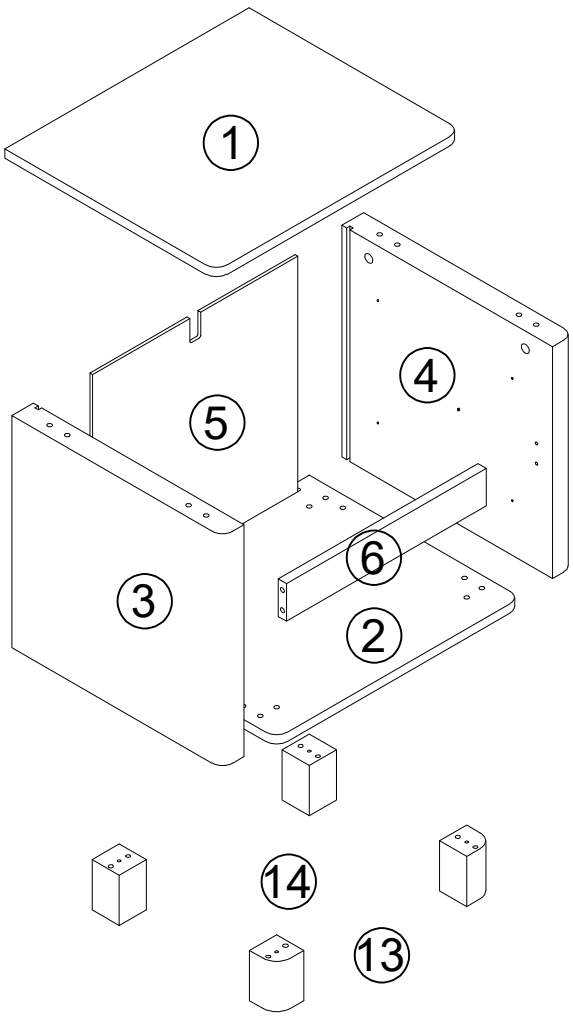


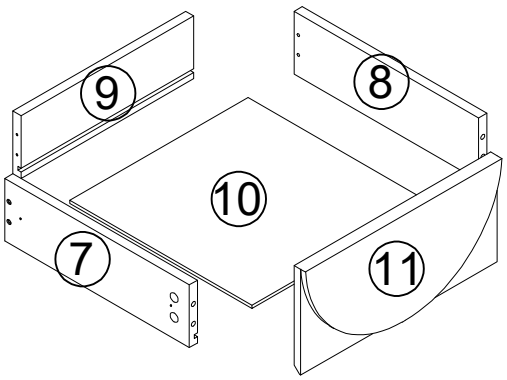


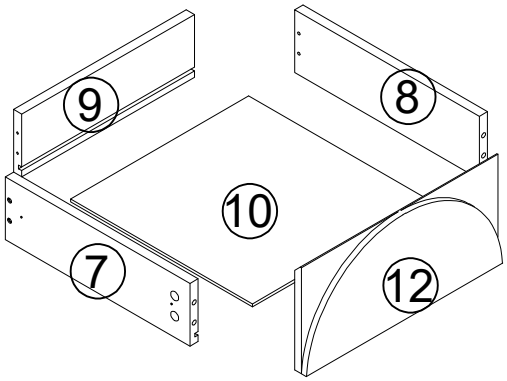


| NO.PARTS LIST | QTY |
|---|---|
| (1) Part 1 | 1 |
| (2) Part 2 | 1 |
| (3) Part 3 | 1 |
| (4) Part 4 | 1 |
| (5) Part 5 | 1 |
| (6) Part 6 | 1 |
| (7) Part 7 | 2 |

| NO.PARTS LIST | QTY |
|---|---|
| (8) Part 8 | 2 |
| (9) Part 9 | 2 |
| (10) Part 10 | 2 |
| (11) Part 11 | 1 |
| (12) Part 12 | 1 |
| (13) Part 13 | 2 |
| (14) Part 14 | 2 |

# ASSEMBLY INSTRUCTION

## DESCRIPTYION
## 6005OAK
## Byron Bedside Table

## HARDWARE LIST

| A | ×16 |
|---|---|
| 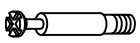 | |
| M6*35mm | |

| B | ×16 |
|---|---|
|  | |
| ϕ15mm | |

| C | ×8 |
|---|---|
|  | |
| M7*50mm | |

| D | ×16 |
|---|---|
| 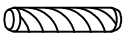 | |
| ϕ8*30mm | |

| E | ×20 |
|---|---|
|  | |
| ϕ3.5*14mm | |

| F | ×4 |
|---|---|
|  | |
| | |

| G | ×8 |
|---|---|
| 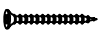 | |
| ϕ4*35mm | |

| H | ×4 |
|---|---|
|  | |
| 340mm | |

| I | ×4 |
|---|---|
|  | |
| 340mm | |

| K | ×1 |
|---|---|
|  | |
| ϕ4*60mm | |

| L | ×8 |
|---|---|
|  | |
| | |

| M | ×1 |
|---|---|
|  | |
| Ø8*30mm | |

| N | ×1 |
|---|---|
|  | |
| M4 | |

| O | x1 |
|---|---|
|  | |
| Ø4.5*12mm | |

| P | x1 |
|---|---|
|  | |
| 65*32*15mm | |

# ASSEMBLY INSTRUCTION

DESCRIPTYION
6005OAK
Byron Bedside Table

## Top Tips before you start!

**1.** Please check that all parts are present before you start the assembly of your furniture, as once assembled,the furniture is exempt from our home approval policy.

**2.** For ease and speed of assembly,we recommend that before you commence each step of the assembly,that you identify all the parts required for that step.

**3.** For larger items,please ensure that you have sufficient space and people(as indicated on page 1) to assemble your product safely.

**4.** We recommend that,where possible,all items are assembled near to the area in which they will be placed in use,to avoid moving the product unnecessarily once assembled.

**5.** For the protection of your furniture,particularly items of high gloss finish,we recommend that the product is placed on a protected surface during assembly to prevent any damage.

**6.** During assembly please take care not to over-tighten any fittings,as this may damage the product.

## Care and Maintenance of your Furniture

- Please periodically check all fittings and re-tighten as necessary.
- Please do not drag or pull your furniture.
- Wipe occasionally with a soft cloth slightly dampened with water.Then buff with a dry clean soft cloth.
- Never allow any kind of liquid to remain on your furniture.Absorption can cause wood to warp or finishes to de-laminate.
- Please do not sit or stand on this item.

# ASSEMBLY INSTRUCTION

DESCRIPTYION
6005OAK
Byron Bedside Table

## SPECIAL TIPS FOR FITTING CAM-LOCKS AND CAM-BOLTS

**CAM-LOCK**

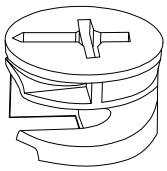

**WHEN FITTING CAMS**

ENSURE STARTING POSITION IS CORRECT
BEFORE YOU INSERT CONNECTING CAM-BOLTS
TURN CLOCKWISE UNTIL SECURE

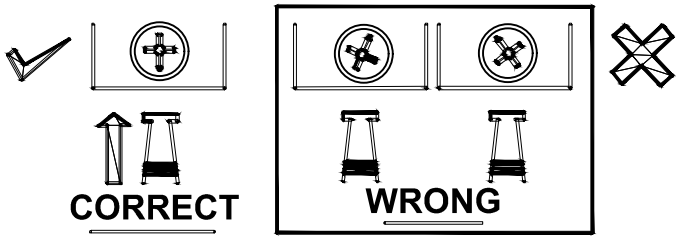


Align with long point of cross

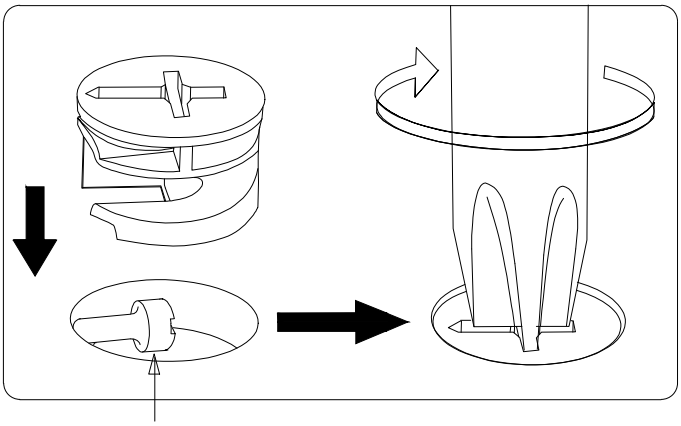

Lock head needs to be in centre

**CAM-BOLT**

Tighten until shoulder is flush with panel.Do not overtighten or undertighten (see example below)

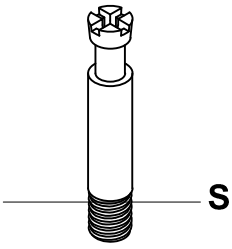


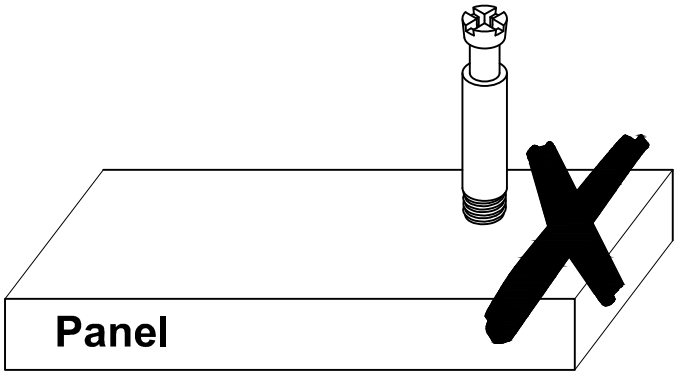


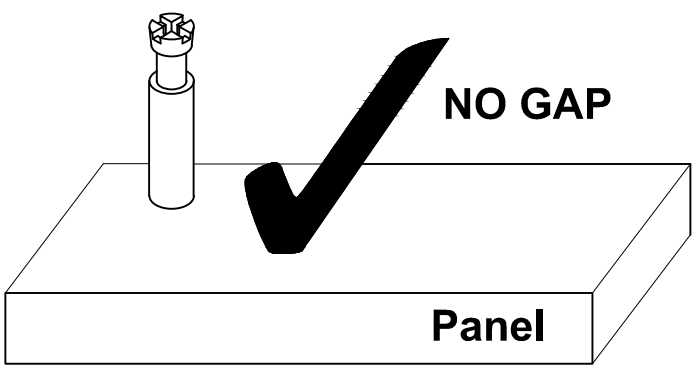

# ASSEMBLY INSTRUCTION

## DESCRIPTYION
## 6005OAK
## Byron Bedside Table

STEP 1

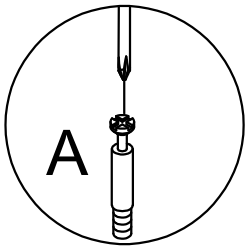


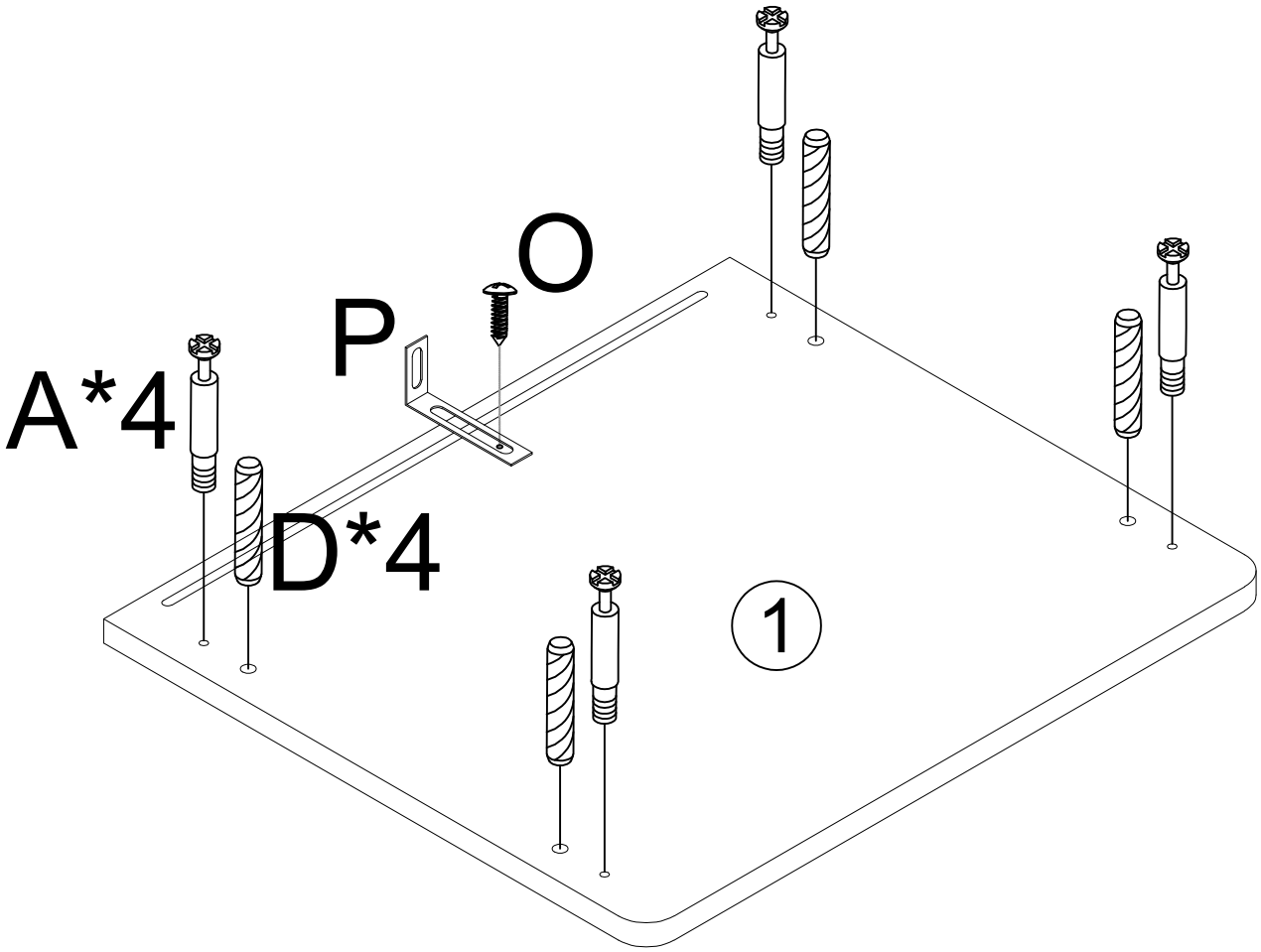


| A | ×4 | D | ×4 | O | x1 | P | x1 |
|---|---|---|---|---|---|---|---|
| M6*35mm | | ø8*30mm | | Ø4.5*12mm | | 65*32*15mm | |

# ASSEMBLY INSTRUCTION

## DESCRIPTYION
## 6005OAK
## Byron Bedside Table

STEP 2

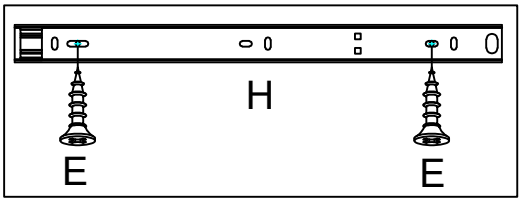


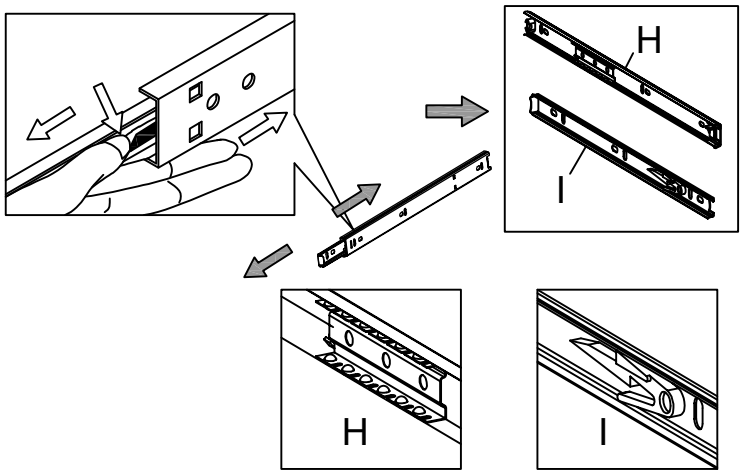


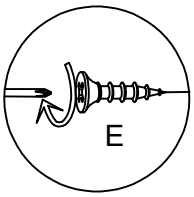


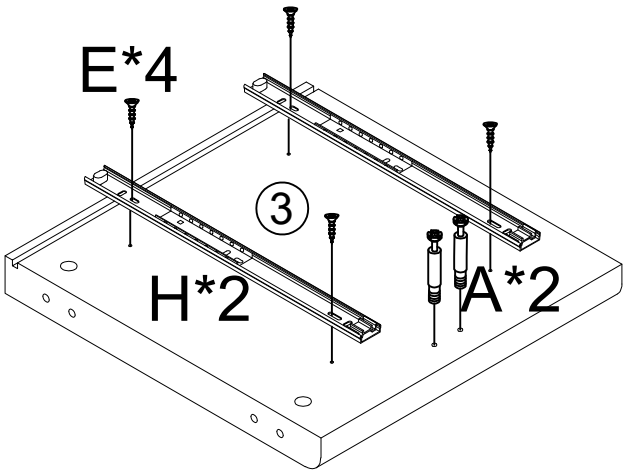


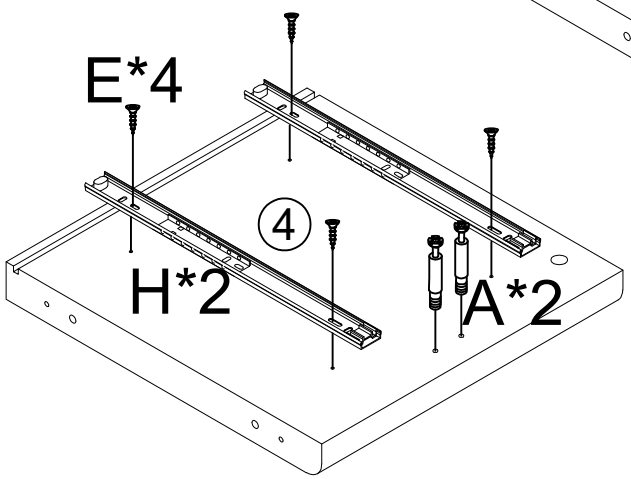


| A | x4 | E | x8 | H | x4 |
|---|---|---|---|---|---|
| 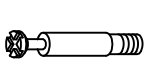 | |  | | 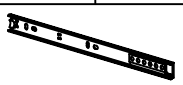 | |
| M6*35mm | | Ø3.5*14mm | | 340mm | |

# ASSEMBLY INSTRUCTION

## DESCRIPTYION
## 6005OAK
## Byron Bedside Table

STEP 3

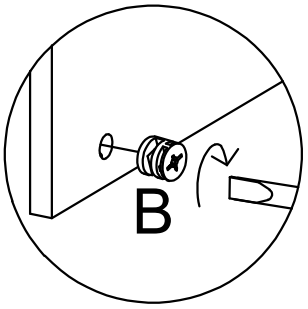


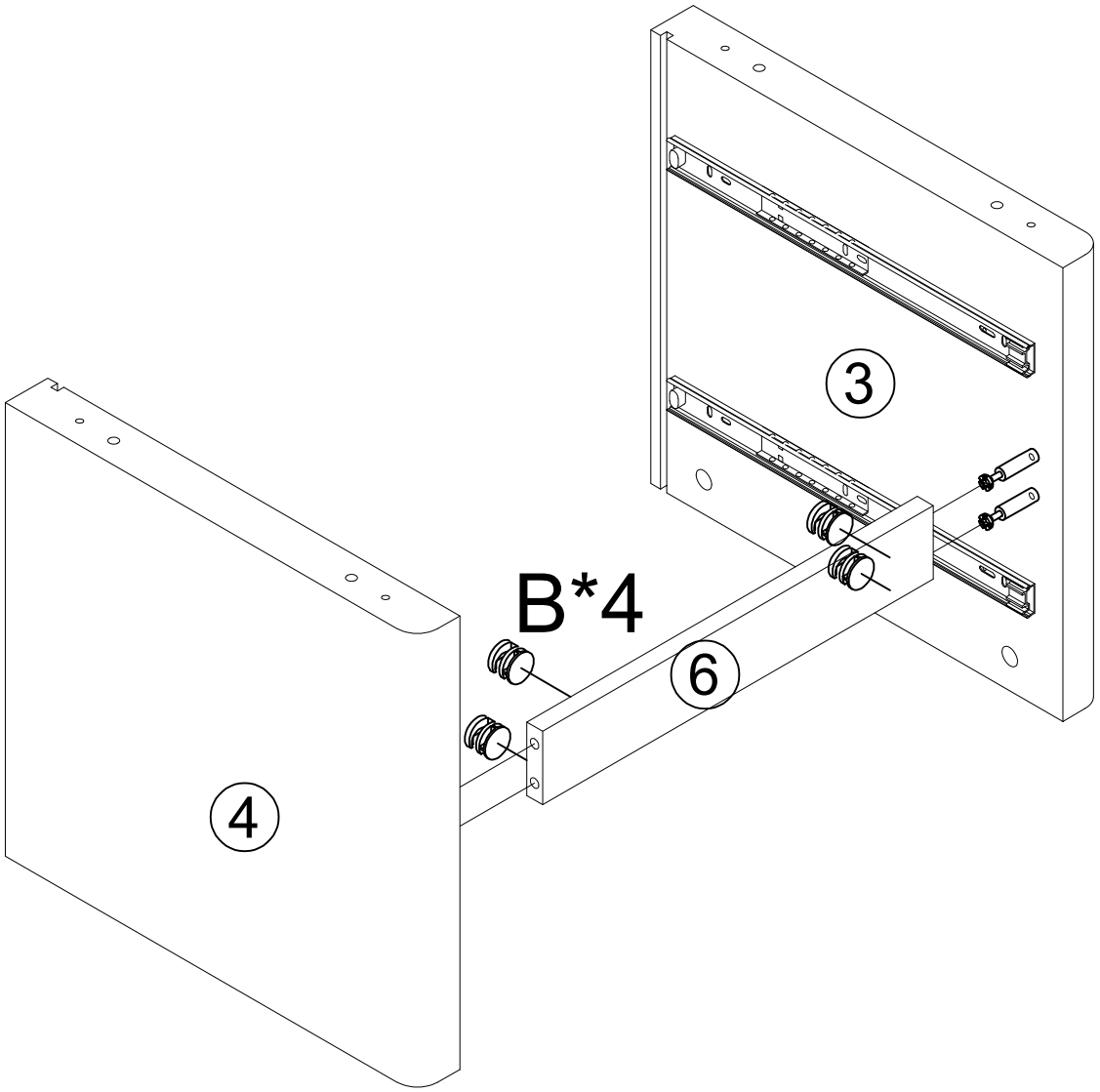


| B | ×4 |
|---|---|
| ϕ15mm | |

# ASSEMBLY INSTRUCTION

## DESCRIPTYION
## 6005OAK
## Byron Bedside Table

STEP 4

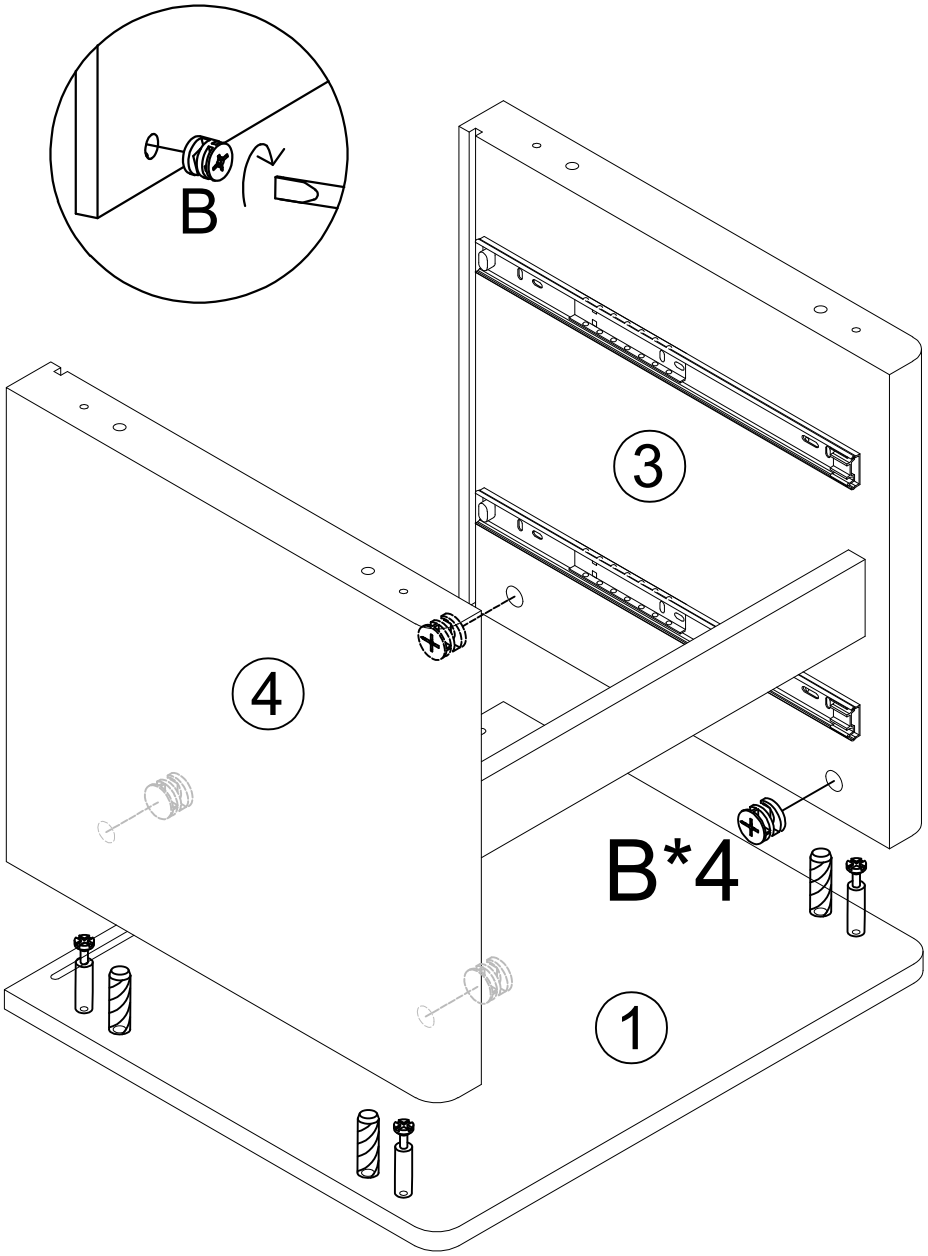


| B | ×4 |
|---|---|
| ϕ15mm | |

# ASSEMBLY INSTRUCTION

## DESCRIPTYION
## 6005OAK
## Byron Bedside Table

STEP 5

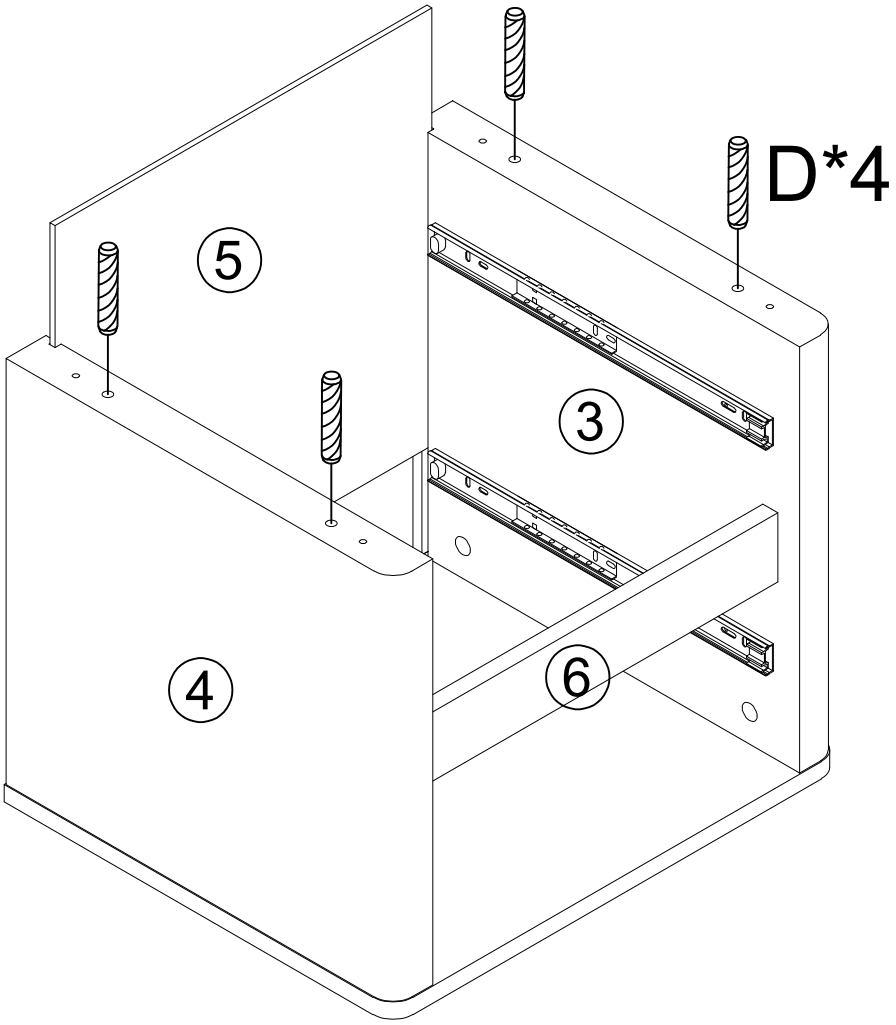


| D | ×4 |
|---|---|
| ø8*30mm | |

# ASSEMBLY INSTRUCTION

## DESCRIPTYION
## 6005OAK
## Byron Bedside Table

STEP 6

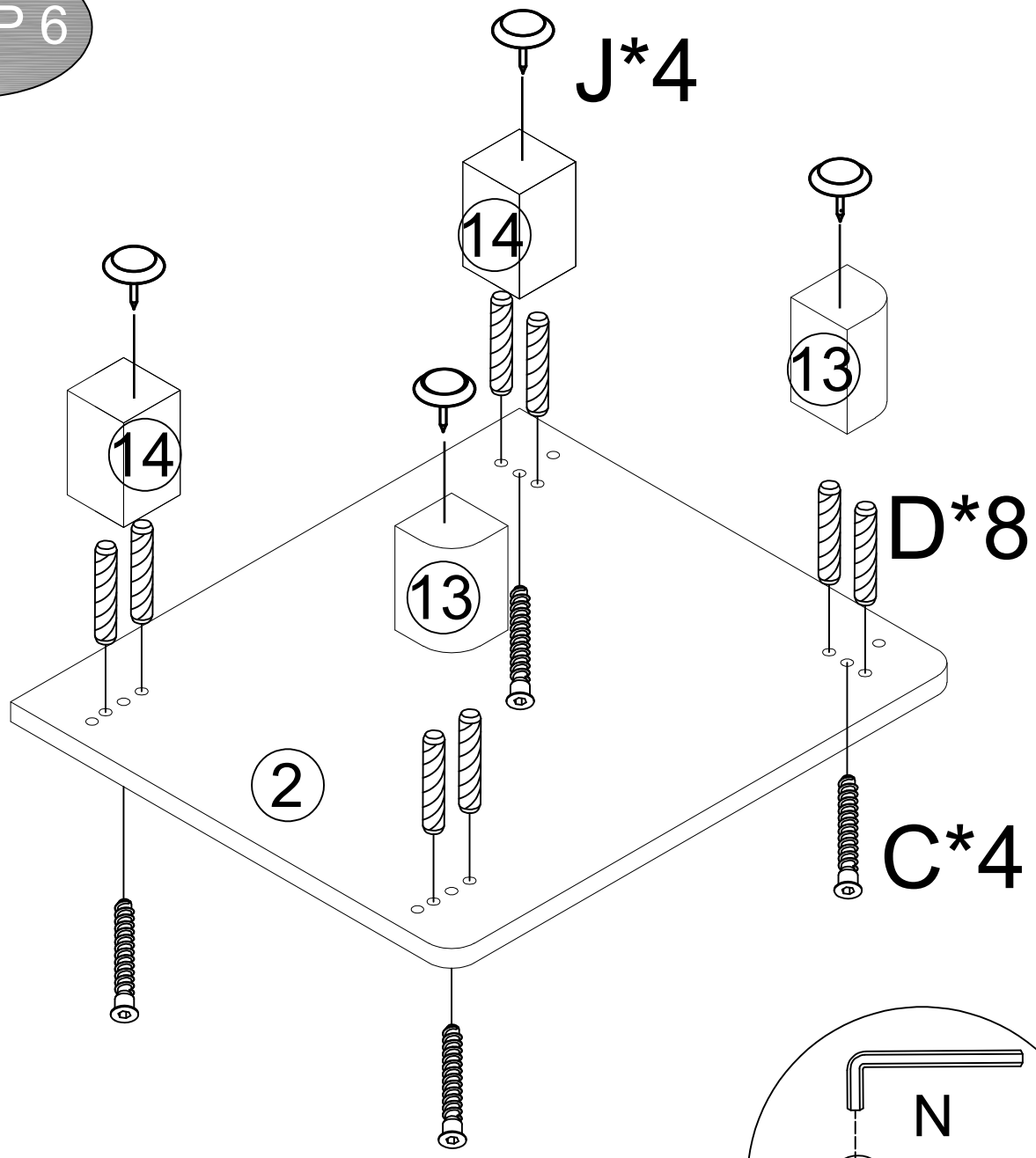


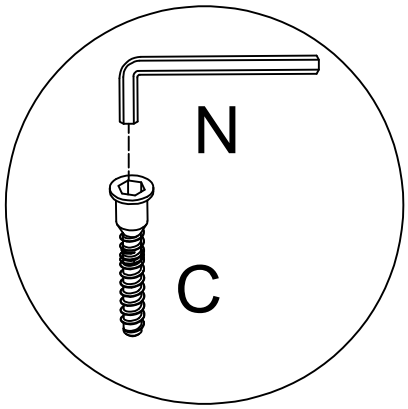


| D | ×8 | J | x4 | C | ×4 | N | ×1 |
|---|---|---|---|---|---|---|---|
| | | | | | | | |
| ø8*30mm | | | | M7*50mm | | M4 | |

# ASSEMBLY INSTRUCTION

## DESCRIPTYION
## 6005OAK
## Byron Bedside Table

STEP 7

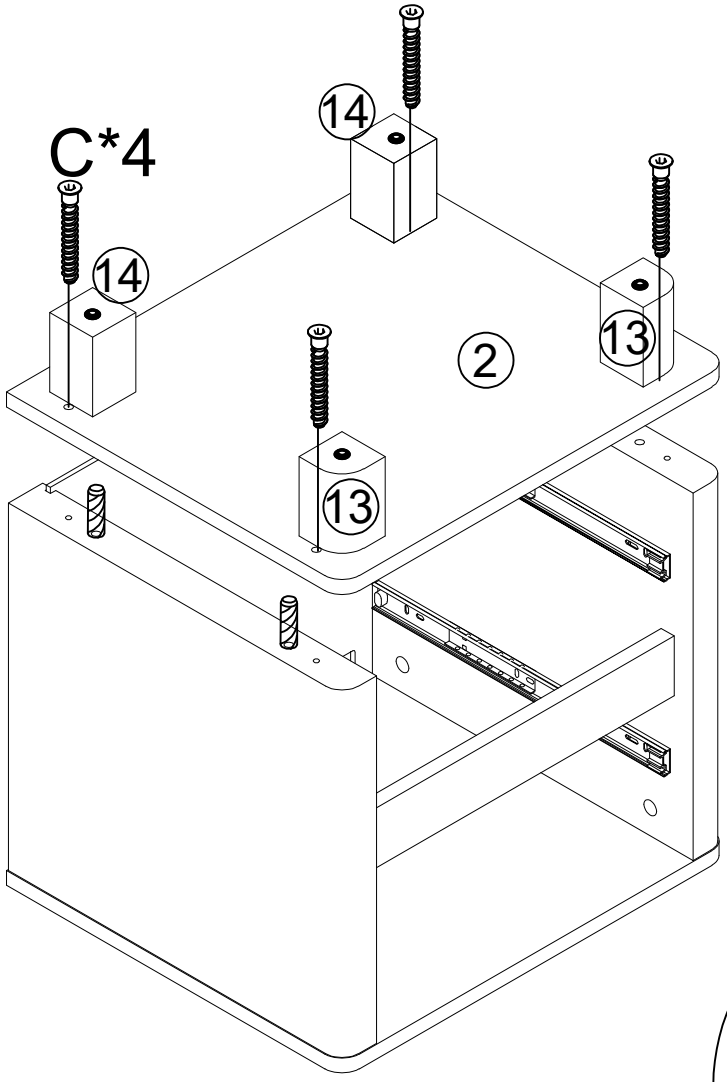


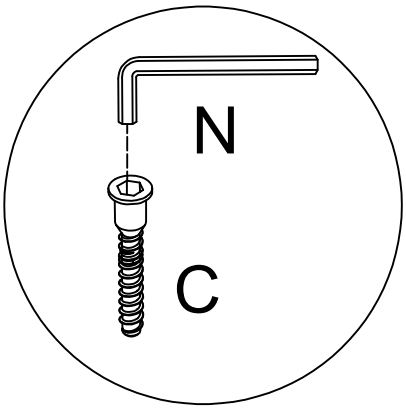


| C | ×4 | N | ×1 |
|---|---|---|---|
|  | |  | |
| M7*50mm | | M4 | |

# ASSEMBLY INSTRUCTION

## DESCRIPTYION
## 6005OAK
## Byron Bedside Table

STEP 8

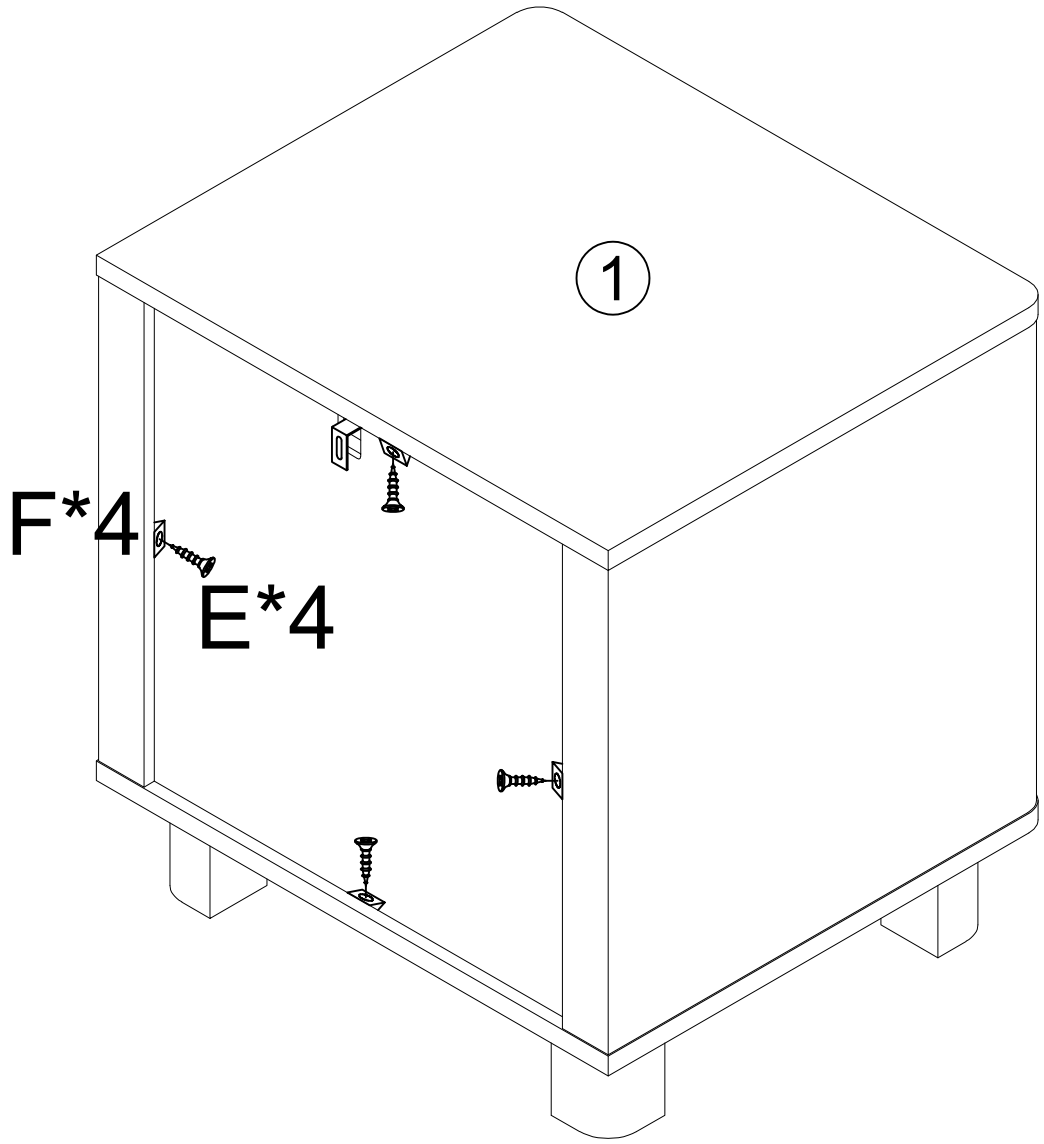


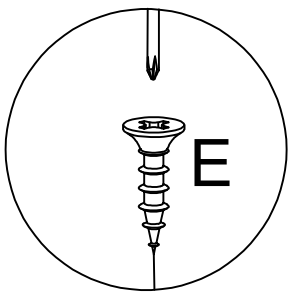


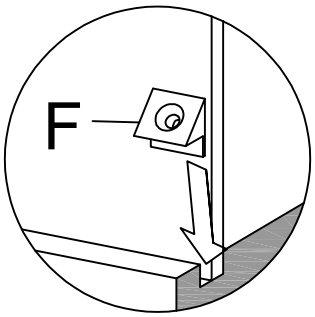


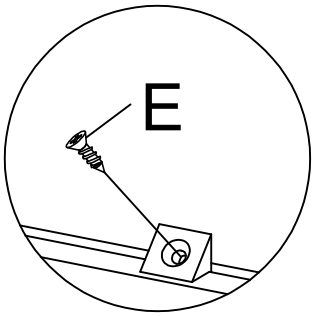


| E | ×4 | F | ×4 |
|---|---|---|---|
|  | |  | |
| ø3.5*14mm | | | |

# ASSEMBLY INSTRUCTION

## DESCRIPTYION
## 6005OAK
## Byron Bedside Table

STEP 9

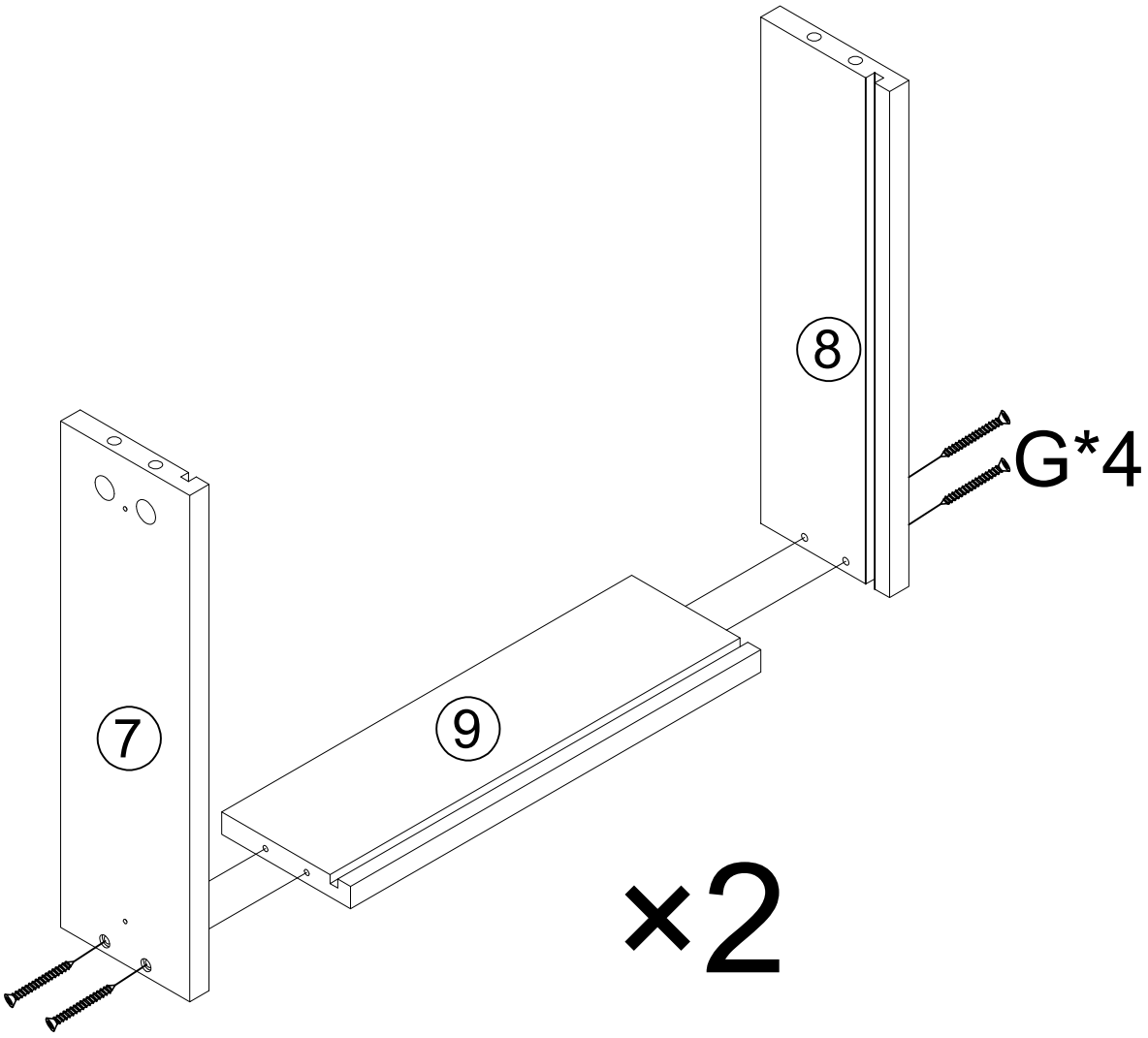


| G | ×8 |
|---|---|
| ϕ4*35mm | |

# ASSEMBLY INSTRUCTION

## DESCRIPTYION
## 6005OAK
## Byron Bedside Table

STEP 10

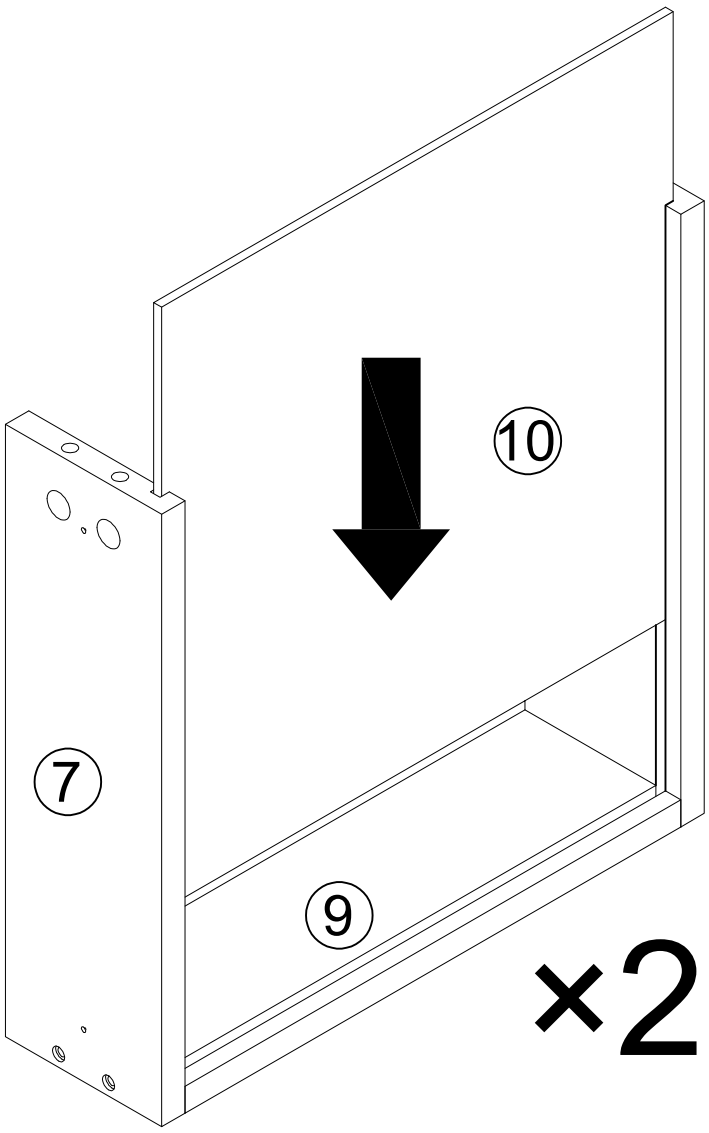

# ASSEMBLY INSTRUCTION

## DESCRIPTYION
## 6005OAK
## Byron Bedside Table

STEP 11

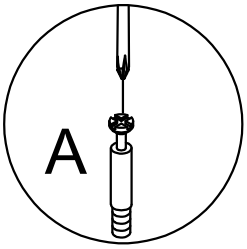


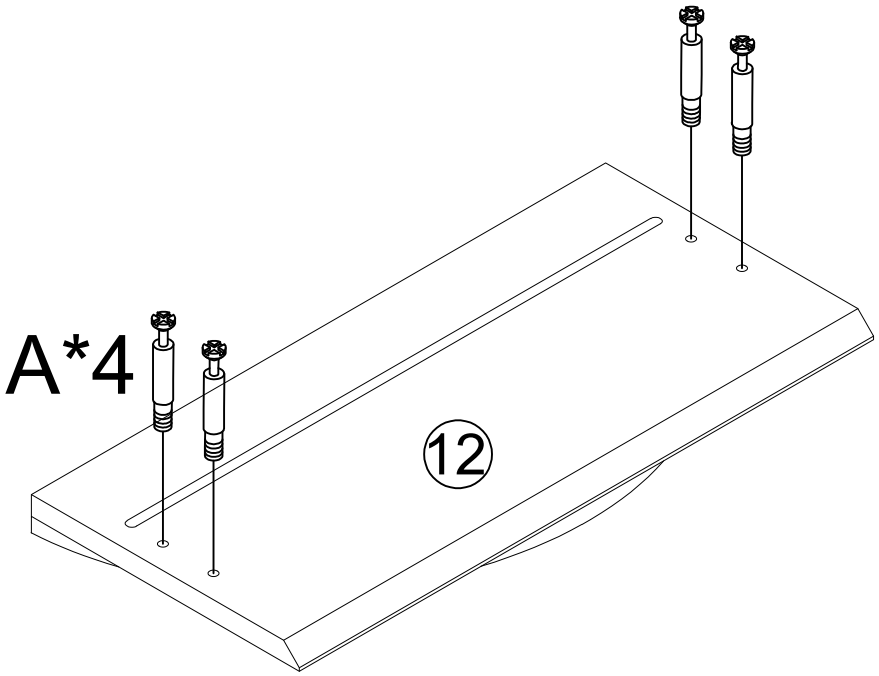


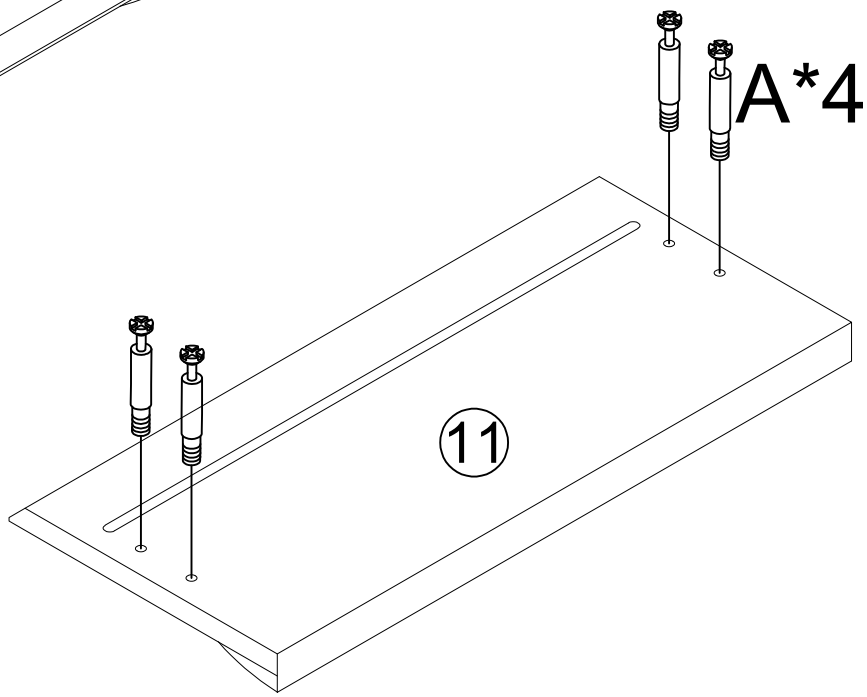


| A | ×8 |
|---|---|
| 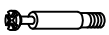 | |
| M6*35mm | |

# ASSEMBLY INSTRUCTION

## DESCRIPTYION
## 6005OAK
## Byron Bedside Table

STEP 12

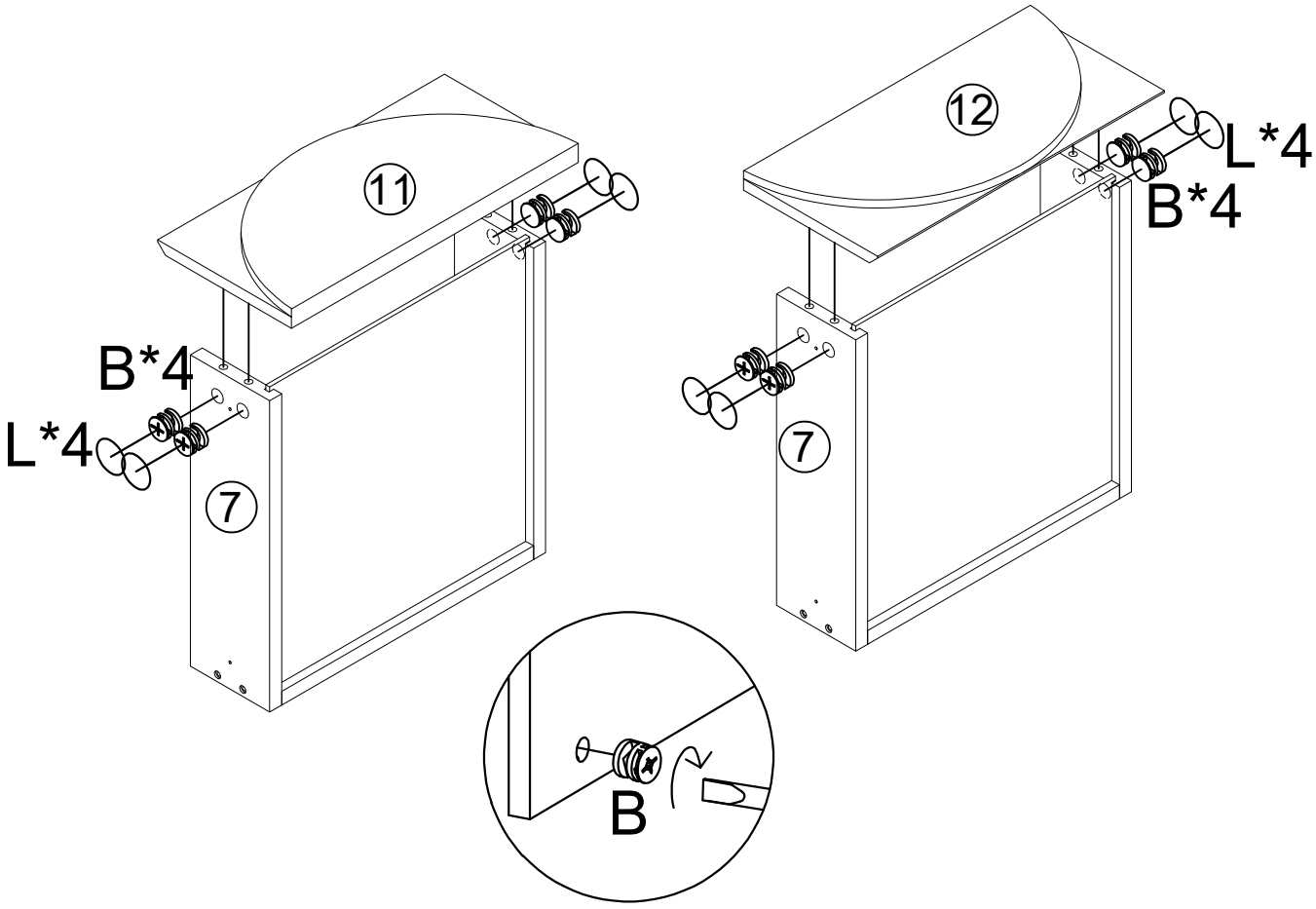


| B | ×8 | L | ×8 |
|---|---|---|---|
| ø15mm | | | |

# ASSEMBLY INSTRUCTION

## DESCRIPTYION
## 6005OAK
## Byron Bedside Table

STEP 13

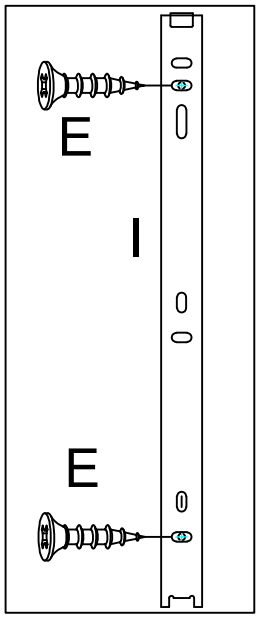


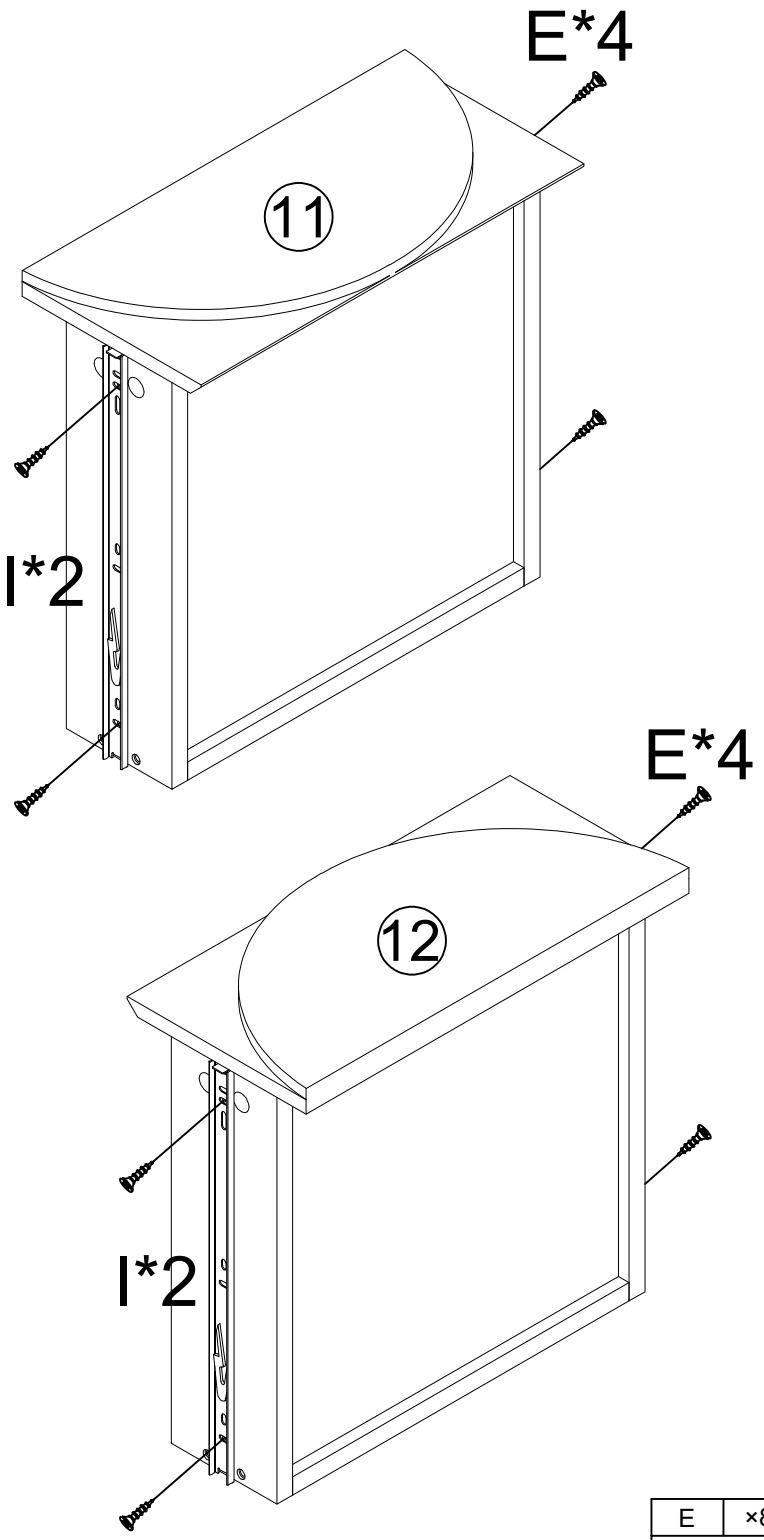


| E | ×8 | I | ×4 |
|---|---|---|---|
| ø3.5*14mm | | 340mm | |

# ASSEMBLY INSTRUCTION

## DESCRIPTYION
## 6005OAK
## Byron Bedside Table

STEP 14

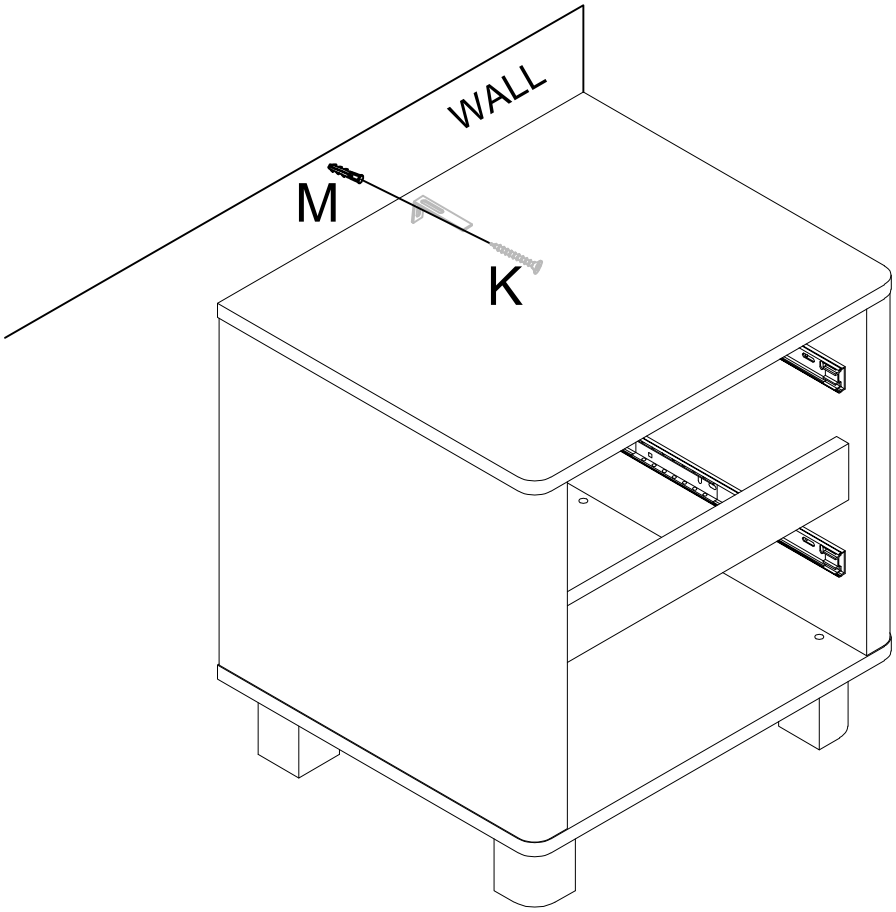


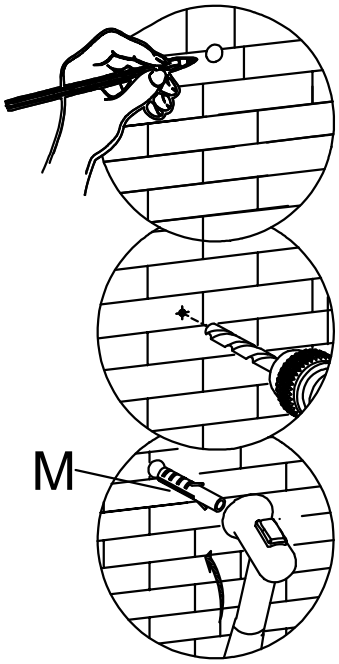


| K | ×1 | M | ×1 |
|---|---|---|---|
| | | | |
| ϕ4*60mm | | Ø8*30mm | |

Note: We recommend the use of the wall attachment bracket/strap provided forsafety reasons. Secure the other end of the strap to the wall with an appropriate screw and wall plug for your wall type(not provided). To hide thestrap behind the unit, drill the hole lower than the top of unit. Warning: Always ensure intended wall area to bedrilled is free from hidden electrical wires, water and gas pipes. NB: Wall fixings are not included-Please sourcesuitable fixing for your wall type. If in doubt please consult a qualified trades person. Please ensure you secureyour product to the wall for you and your family's safety before you use it.

# ASSEMBLY INSTRUCTION

## DESCRIPTYION
## 6005OAK
## Byron Bedside Table

STEP 15

