ASSEMBLY INSTRUCTION

DESCRIPTION

6008WHT

Hampton Bedside Table

1.5 hr

APPROXIMATE ASSEMBLY TIME

2 PERSON ASSEMBLY

FLOORAREA
2MX1.6M

REQUIRED ASSEMBLY SOACE

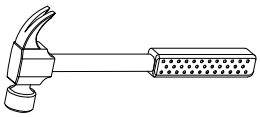

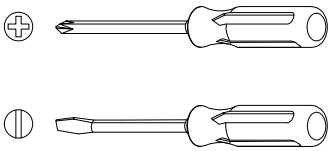

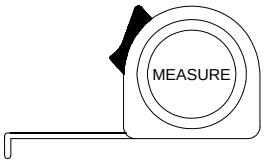

REQUIRED ASSEMBLY TOOLS

ASSEMBLED DIMENSIONS

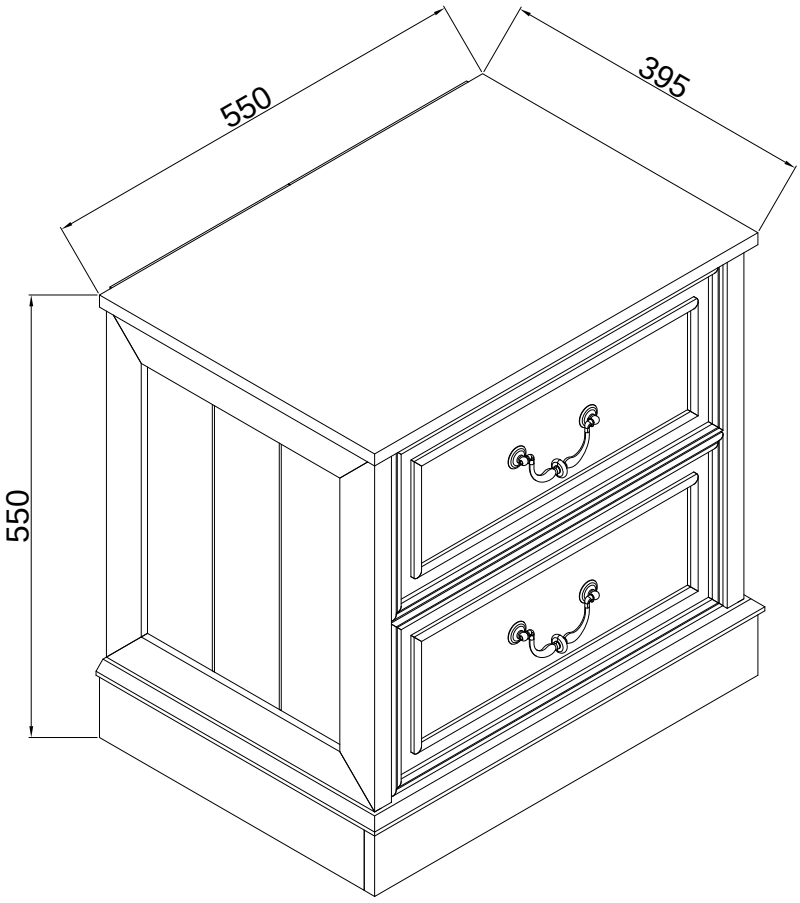

ASSEMBLY INSTRUCTION

DESCRIPTION

6008WHT

Hampton Bedside Table

WARNING : ENSURE THE WALL STRAP IS ATTACHED TO AVOID SERIOUS INJURY OR DEATH.

To avoid any serious or fatal injury, a wall strap has been provided with this product to prevent toppling. Always secure this product with an anchor device to the wall or suitable surface. Wall fixing hardware are not included since different surface materials require different attachments. Please seek professional advice if you are in doubt of what fixing device to use.

Your product has been provided with a permanent safety label that should never be removed for safety reasons.



ASSEMBLY INSTRUCTION

DESCRIPTION

6008WHT

Hampton Bedside Table

PARTS LIST

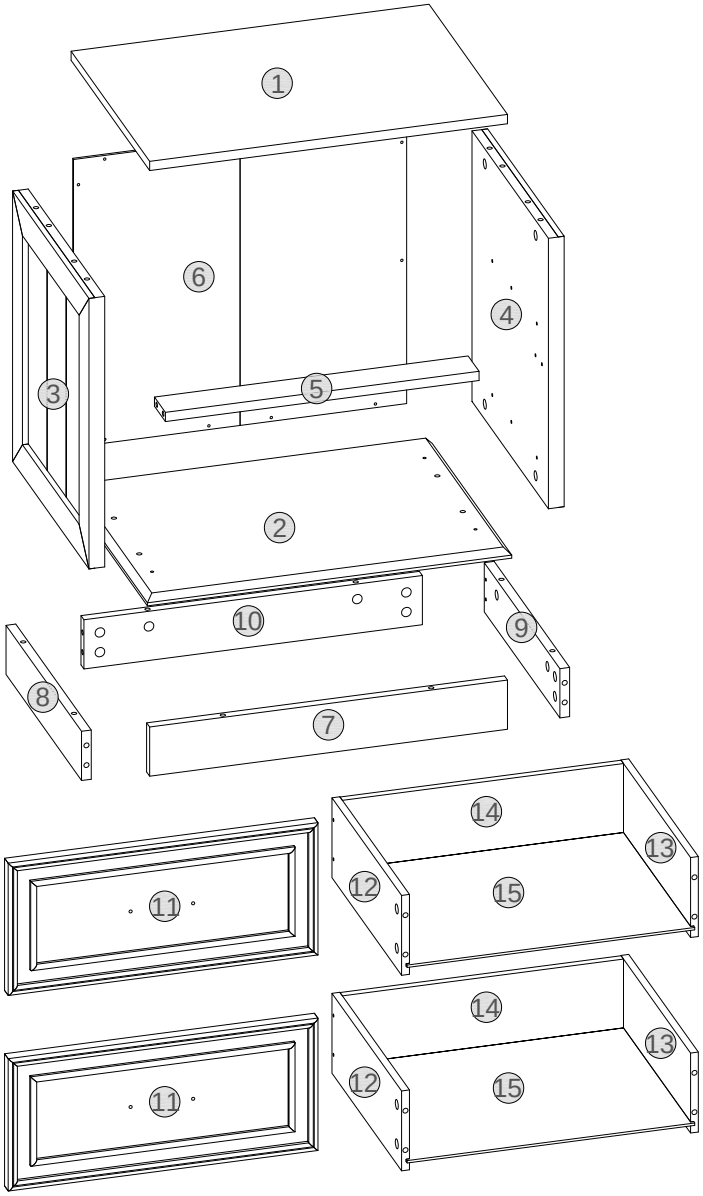

NO.	PARTS LIST	QTY	NO.	PARTS LIST	QTY
(1)	Part1	1	(9)	Part9	1
(2)	Part2	1	(10)	Part10	1
(3)	Part3	1	(11)	Part11	2
(4)	Part4	1	(12)	Part12	2
(5)	Parts	1	(13)	Part13	2
(6)	Part6	1	(14)	Part14	2
(7)	Part7	1	(15)	Part15	2
(8)	Part8	1			

ASSEMBLY INSTRUCTION

DESCRIPTION

6008WHT

Hampton Bedside Table

HARDWARE LIST

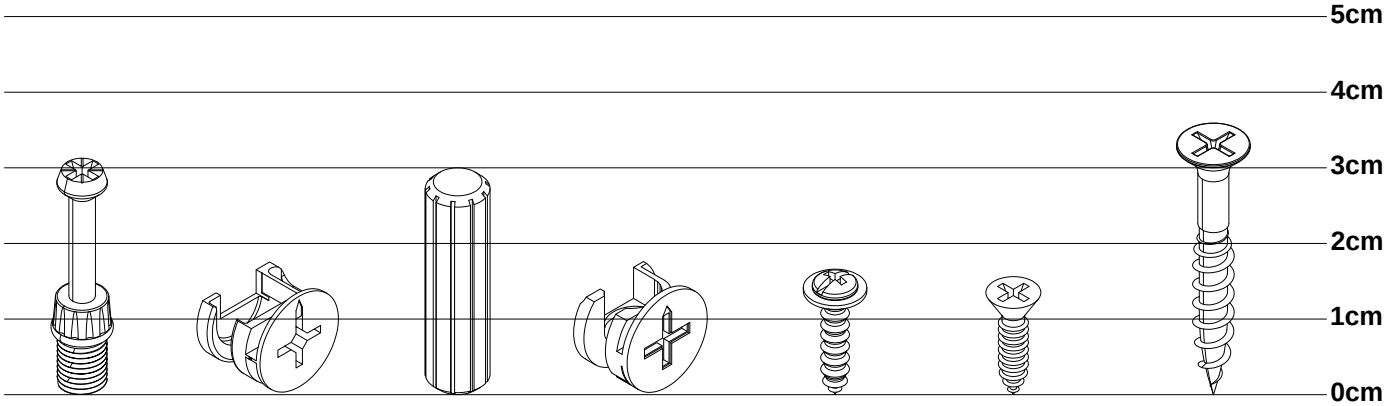

36X	28X	8X	8X	14X	12X	8X
M7.5m/m	Dia:15x11.5m/m	Dia:8x30m/m	Dia:15x9.5m/m	Dia:3x16m/m	Dia:3.5x16m/m	Dia:3.5x35m/m
A	**B**	**C**	**D**	**E**	**F**	**G**
CAM-BOLT	CAM-LOCK	WOOD DOWEL	CAM-LOCK	WOOD SCREW	WOOD SCREW	WOOD SCREW



12X	4X
Dia:6x10m/m	Dia:4x18m/m
I	**J**
WOOD SCREW	HANDLE SCREW

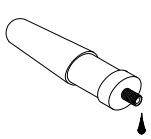

1X
H
GLUE

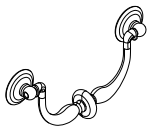

2X
K
HANDLE

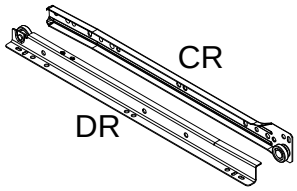

2X
Dia:14"
Y
RIGHT RUNNER

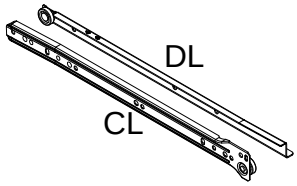

2X
Dia:14"
Y
LEFT RUNNER

ASSEMBLY INSTRUCTION

DESCRIPTION

6008WHT

Hampton Bedside Table

Top Tips before you start!

1. Please check that all parts are present before you start the assembly of your furniture, as once assembled, the furniture is exempt from our home approval policy.

2. For ease and speed of assembly, we recommend that before you commence each step of the assembly, that you identify all the parts required for that step.

3. For larger items,please ensure that you have sufficient space and people(as indicated on page 1) to assemble your product safely.

4. We recommend that.where possible,all items are assembled near to the area in which they will be placed in use, to avoid moving the product unnecessarily once assembled.

5. For the protection of your fumiture,partirularly items of high gloss finish, we recommend that the product is placed on a protected surface during assembly to prevent any damage.

6. During assembly please take care not to over-tighten any fittings,as this may damage the product.

Care and Maintenance of your Furniture

- Please periodically check all fittings and re-tighten as necessary.
- Please do not drag or pull your furniture.
- Wipe occasionally with a soft cloth slightly dampened with water.Then buff with a dry clean soft cloth.
- Never allow any kind of liquid to remain on your furniture.Absorption can cause wood to warp or finishes to de-laminate.
- Please do not sit or stand on this item.

ASSEMBLY INSTRUCTION

DESCRIPTION

6008WHT

Hampton Bedside Table

STEP 1

SPECIAL TIPS FOR FITTING CAM-LOCKS AND CAM-BOLTS

CAM-LOCK

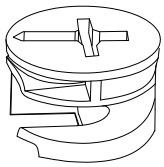

WHEN FITTING CAMS

ENSURE STARTING POSmON 15 CORRECT
BEFORE YOU INSERT CONNECTING CAM-BOLTS
TURN CLOCKWISE UNTIL SECURE

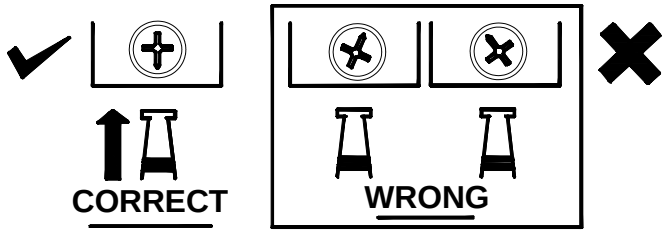

Align with long point of cross

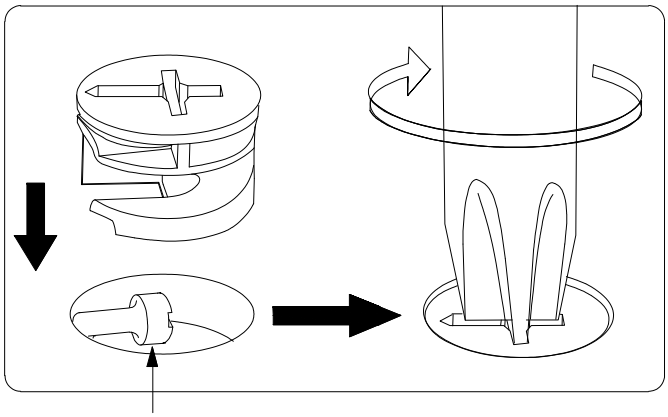

Lock head needs to be in centre

CAM-BOLT

Tighten until shoulder is flush with panel.Do not overtighten or undertighten (see example below)

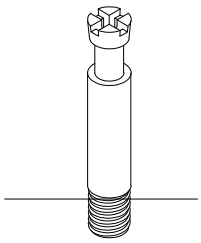

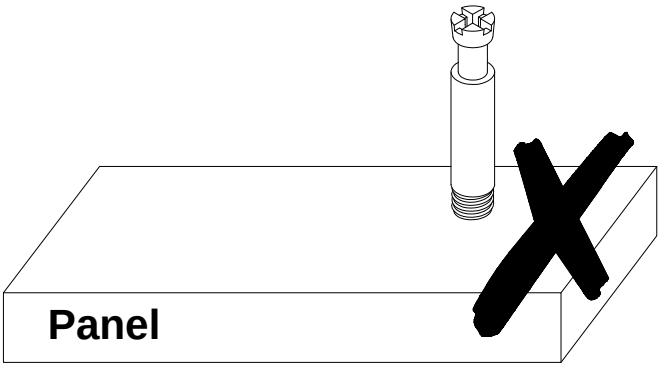

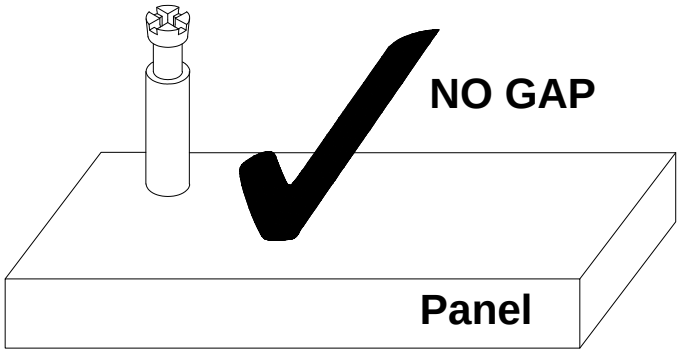

ASSEMBLY INSTRUCTION

DESCRIPTION

6008WHT

Hampton Bedside Table

STEP 2

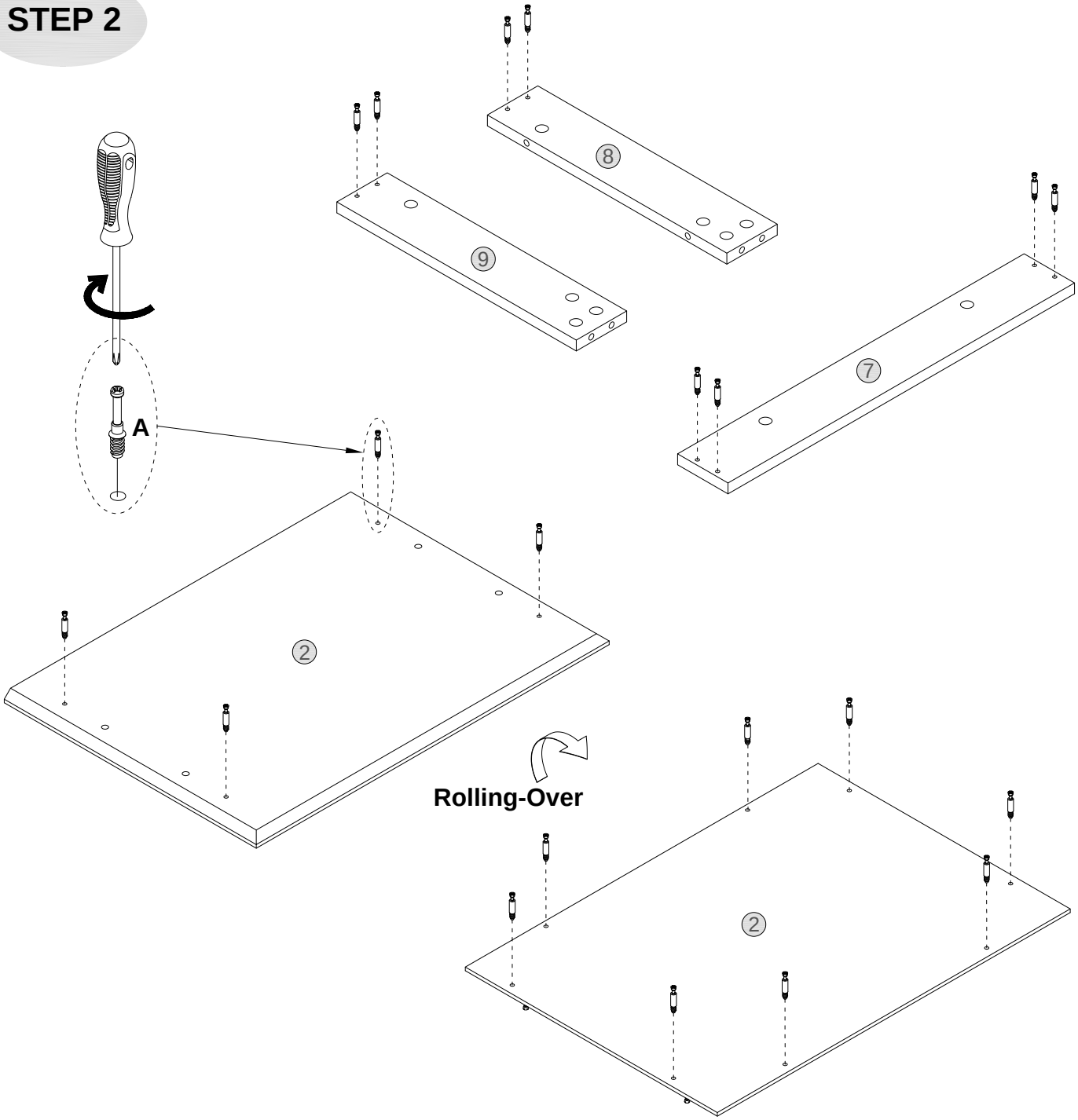

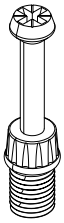

20X
A

ASSEMBLY INSTRUCTION

DESCRIPTION

6008WHT

Hampton Bedside Table

STEP 3

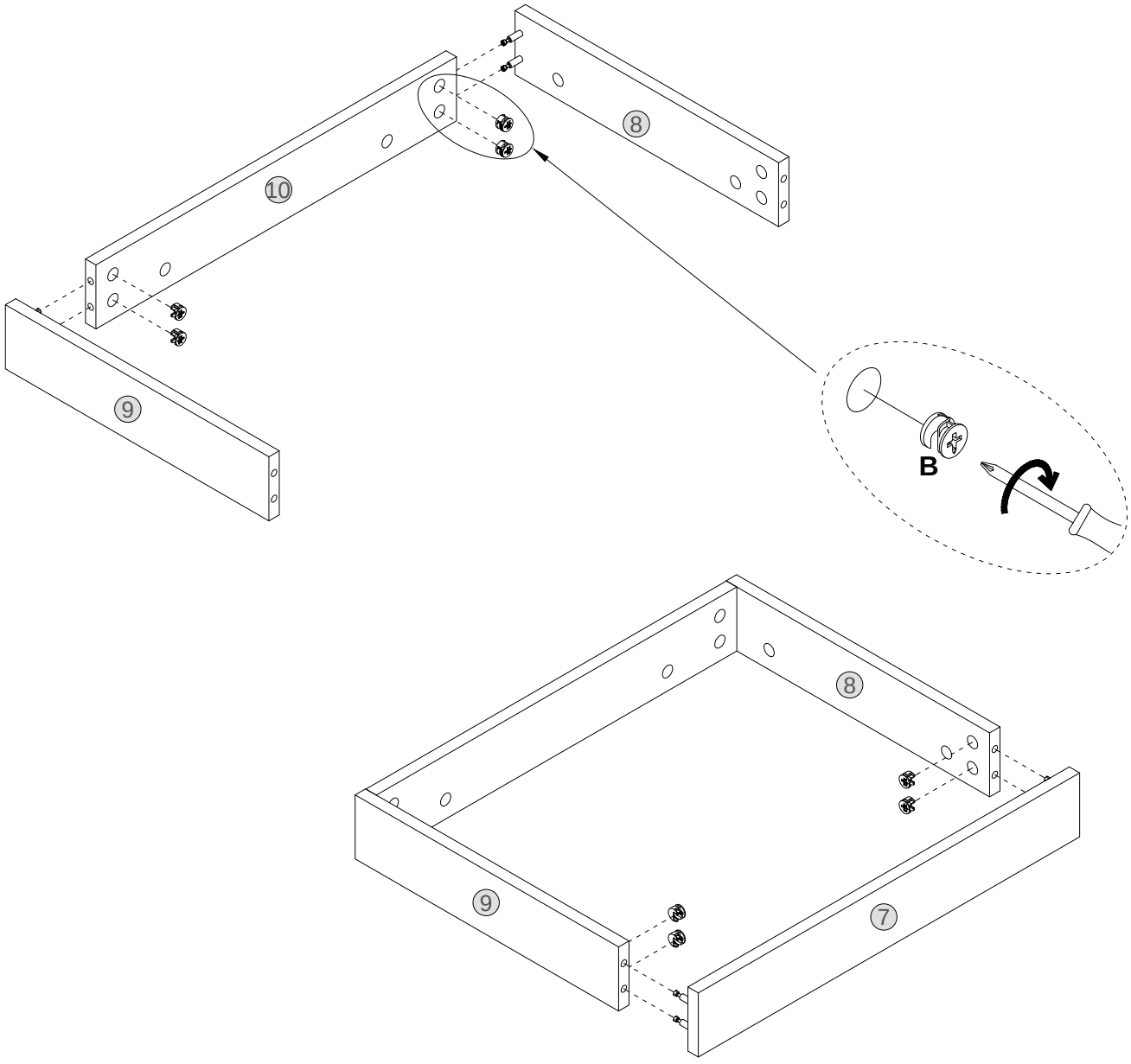

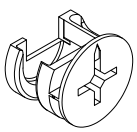

8X
B

ASSEMBLY INSTRUCTION

DESCRIPTION

6008WHT

Hampton Bedside Table

STEP 4

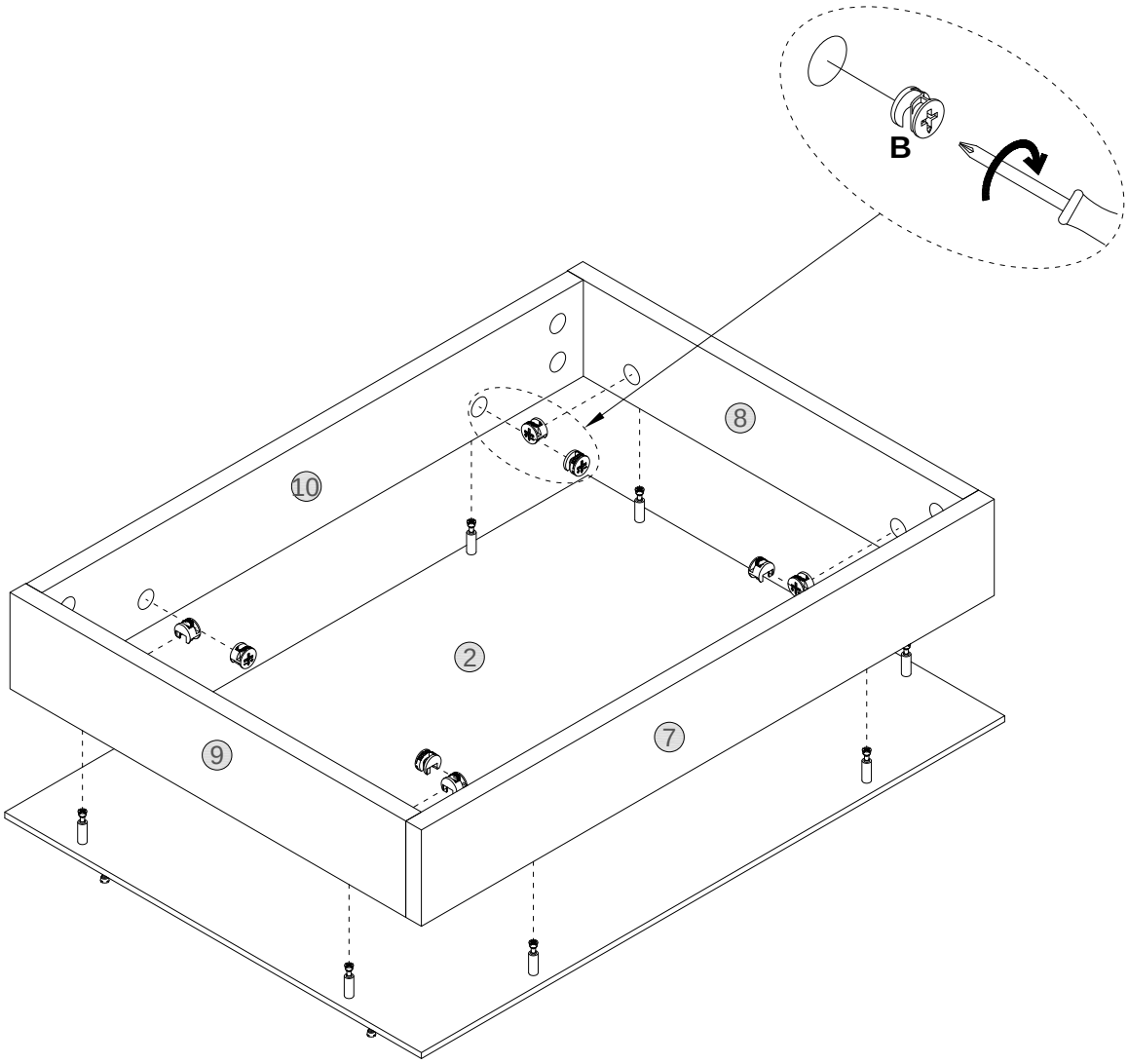

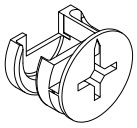

8X
B

ASSEMBLY INSTRUCTION

DESCRIPTION

6008WHT

Hampton Bedside Table

STEP 5

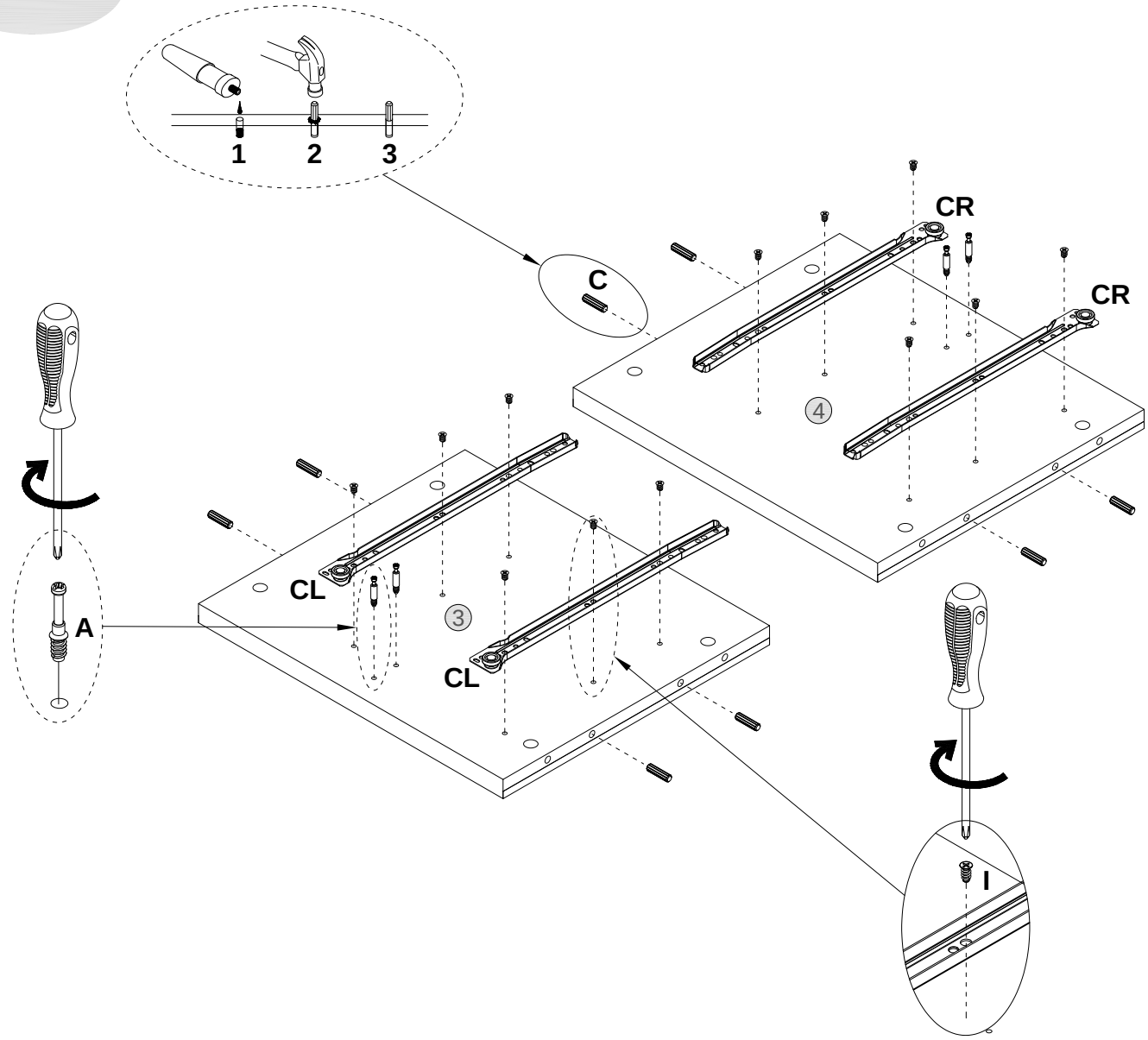

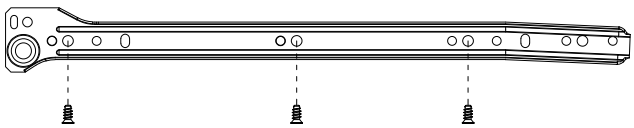

CL
LEFT RUNNER

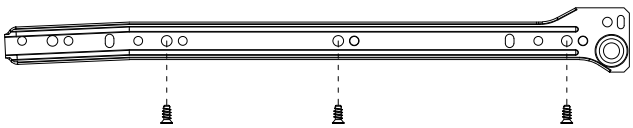

CR
RIGHT RUNNER

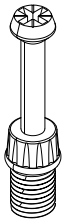

4X
A

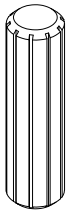

8X
C



12X
I

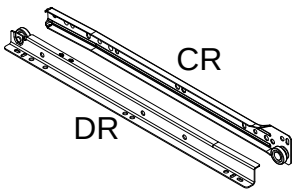

2X
Y

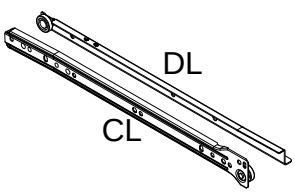

2X
Y

ASSEMBLY INSTRUCTION

DESCRIPTION

6008WHT

Hampton Bedside Table

STEP 6

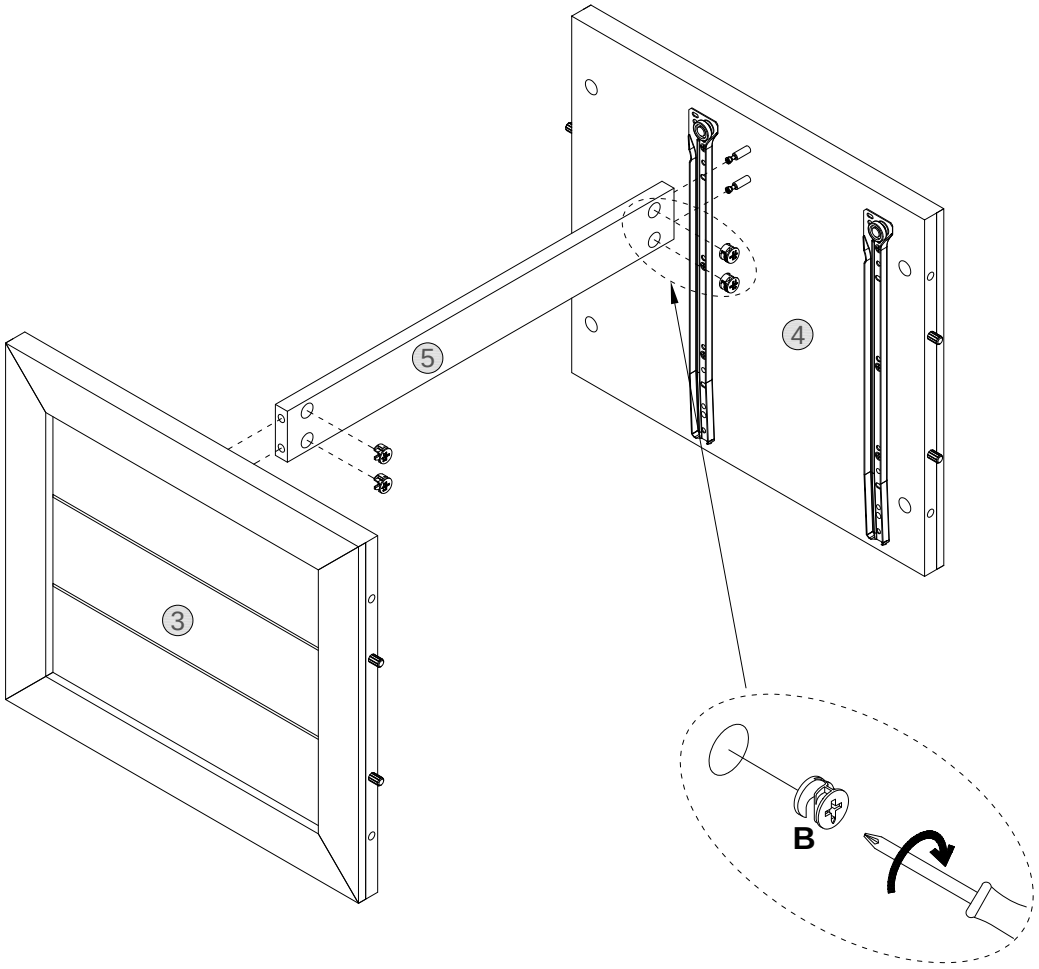

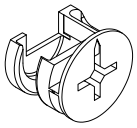

4X
B

ASSEMBLY INSTRUCTION

DESCRIPTION

6008WHT

Hampton Bedside Table

STEP 7

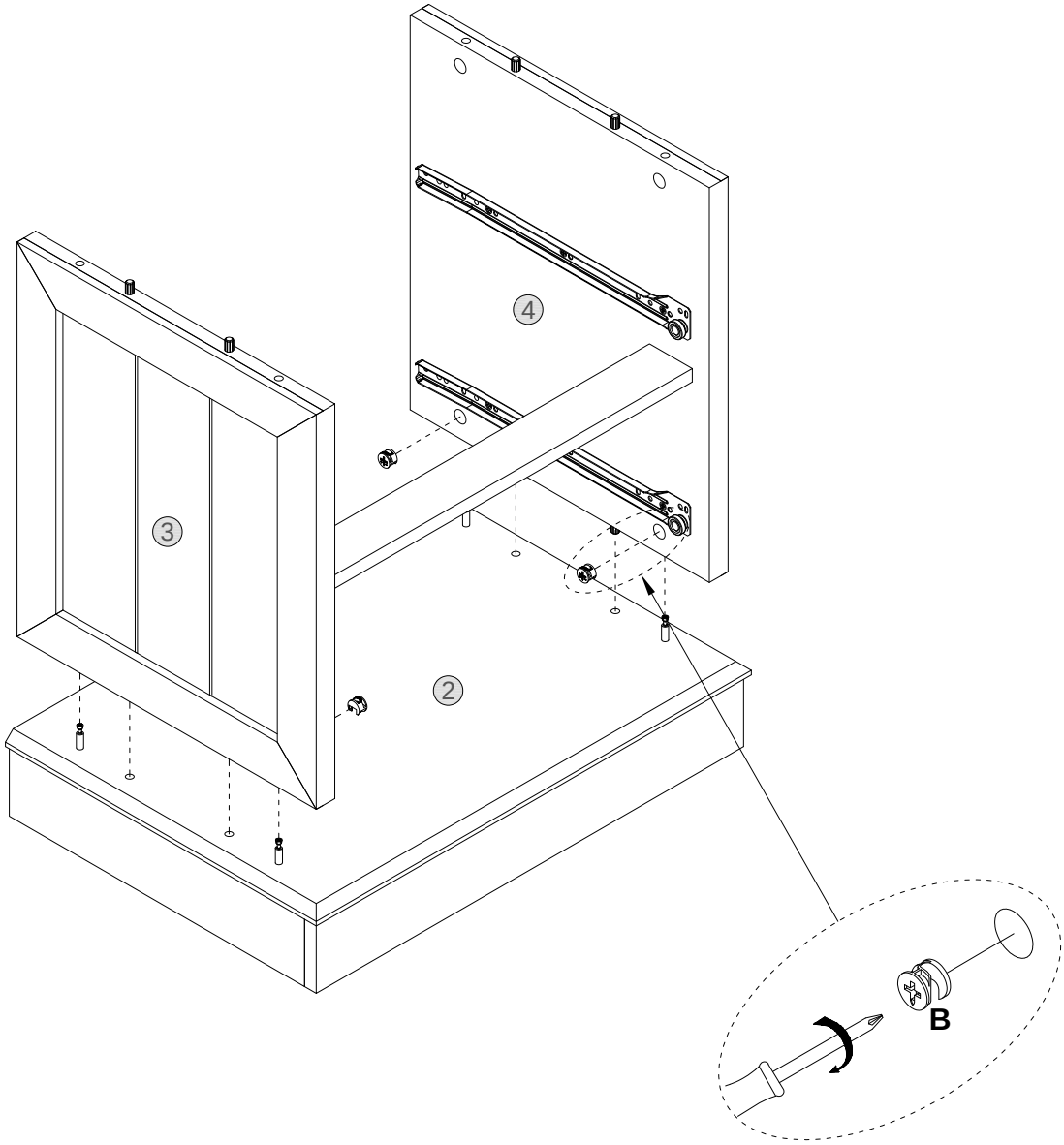

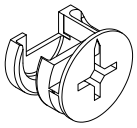

4X
B

ASSEMBLY INSTRUCTION

DESCRIPTION

6008WHT

Hampton Bedside Table

STEP 8

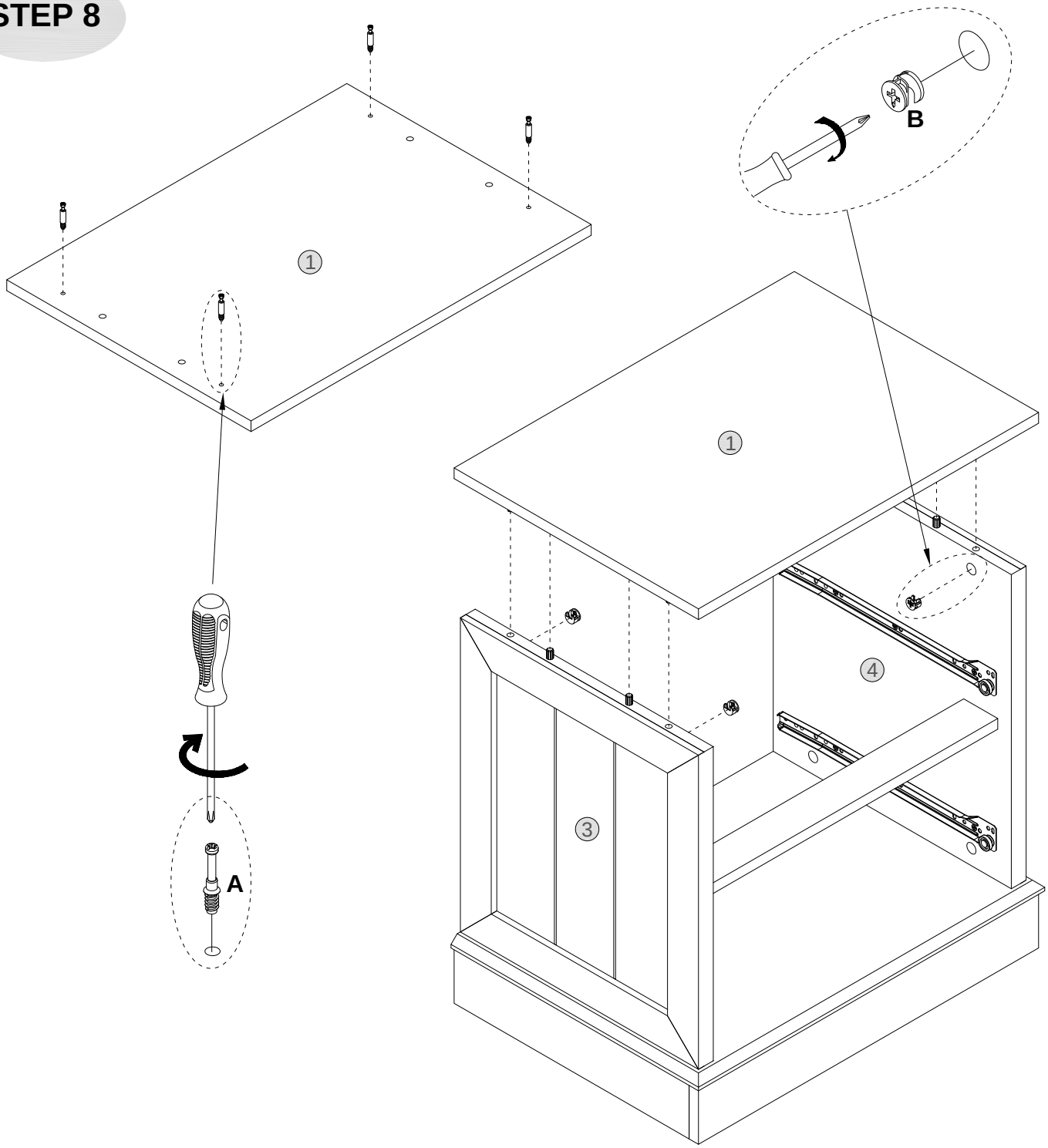

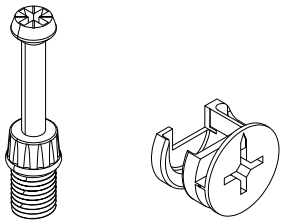

4X
A

4X
B

ASSEMBLY INSTRUCTION

DESCRIPTION

6008WHT

Hampton Bedside Table

STEP 9

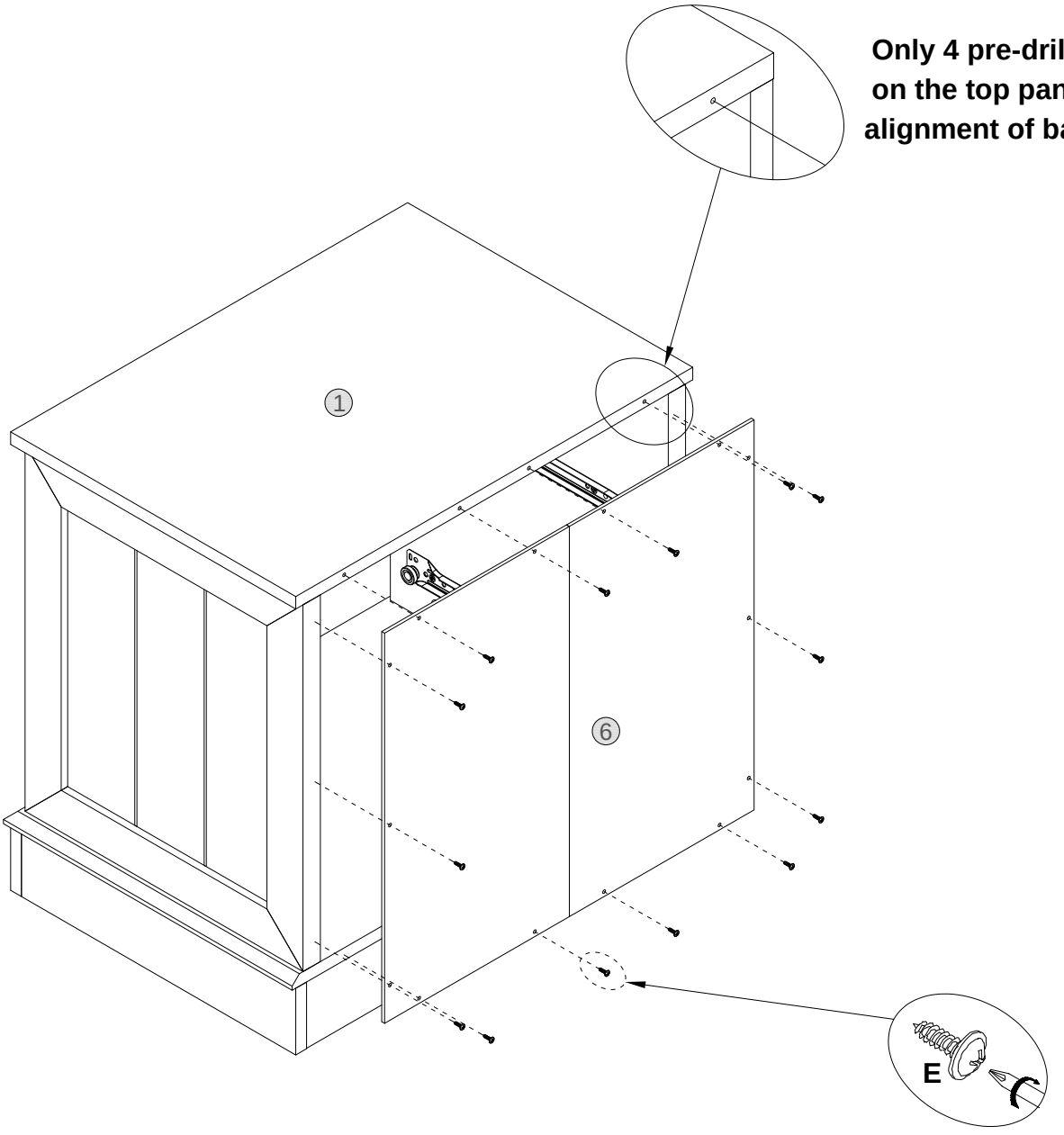



14X
E

ASSEMBLY INSTRUCTION

DESCRIPTION

6008WHT

Hampton Bedside Table

STEP 10

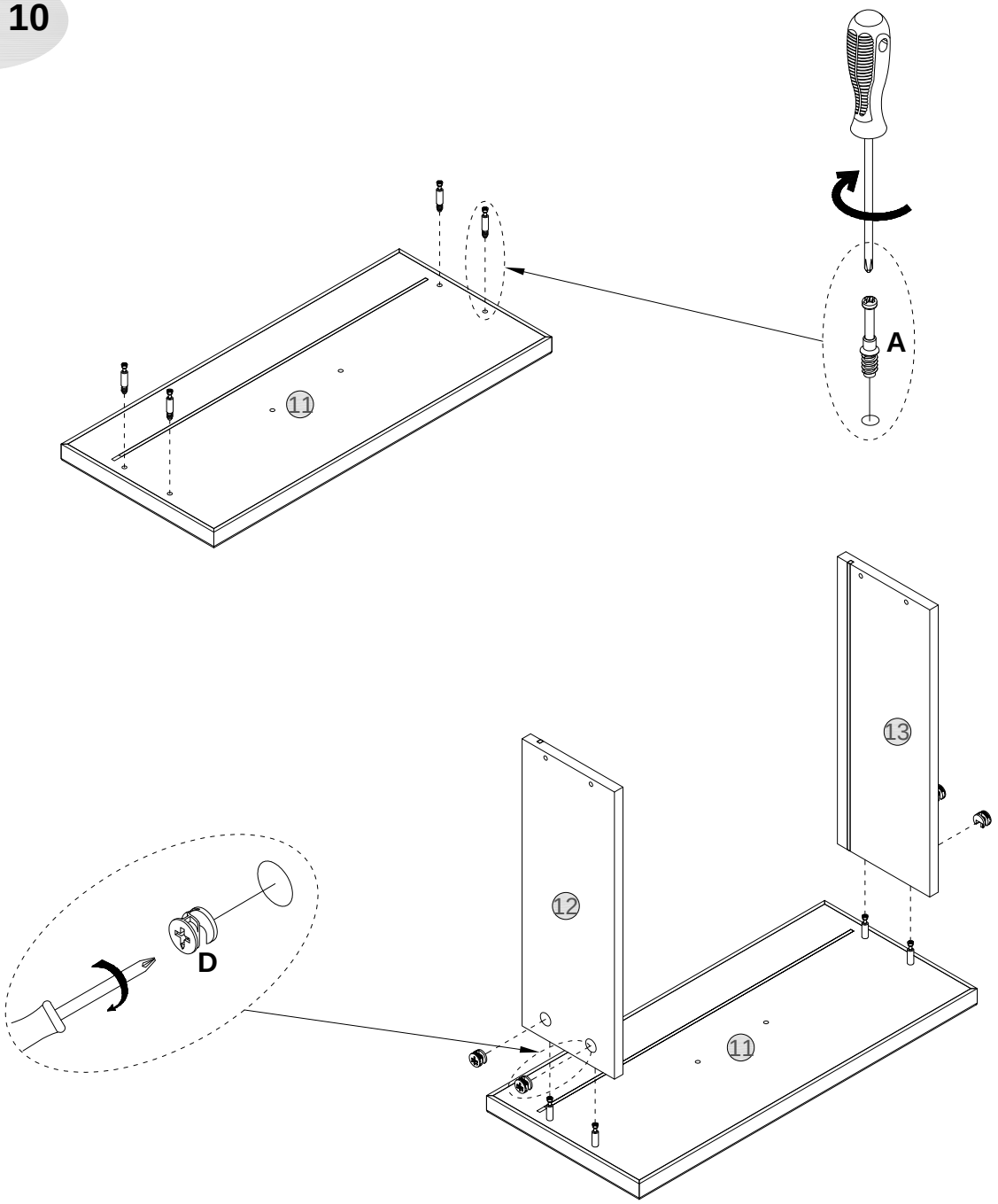

x2

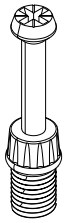

8X
A

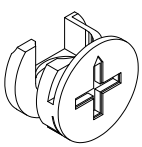

8X
D

ASSEMBLY INSTRUCTION

DESCRIPTION

6008WHT

Hampton Bedside Table

STEP 11

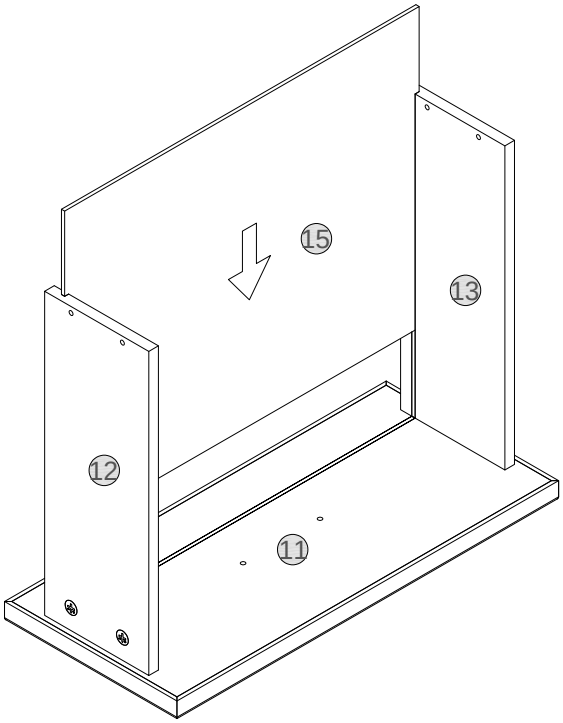

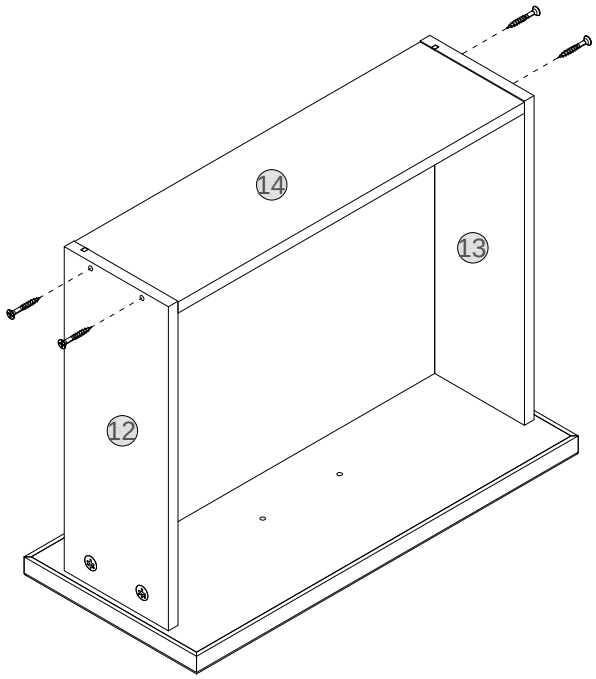

x2

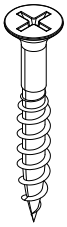

8X
G

ASSEMBLY INSTRUCTION

DESCRIPTION

6008WHT

Hampton Bedside Table

STEP 12

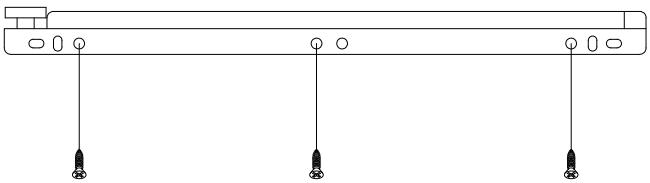

DL
LEFT RUNNER

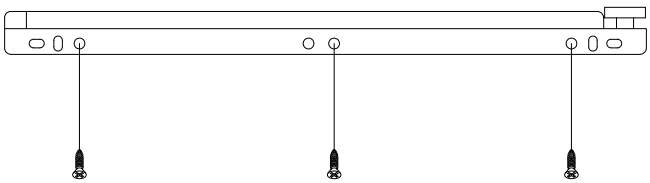

DR
RIGHT RUNNER

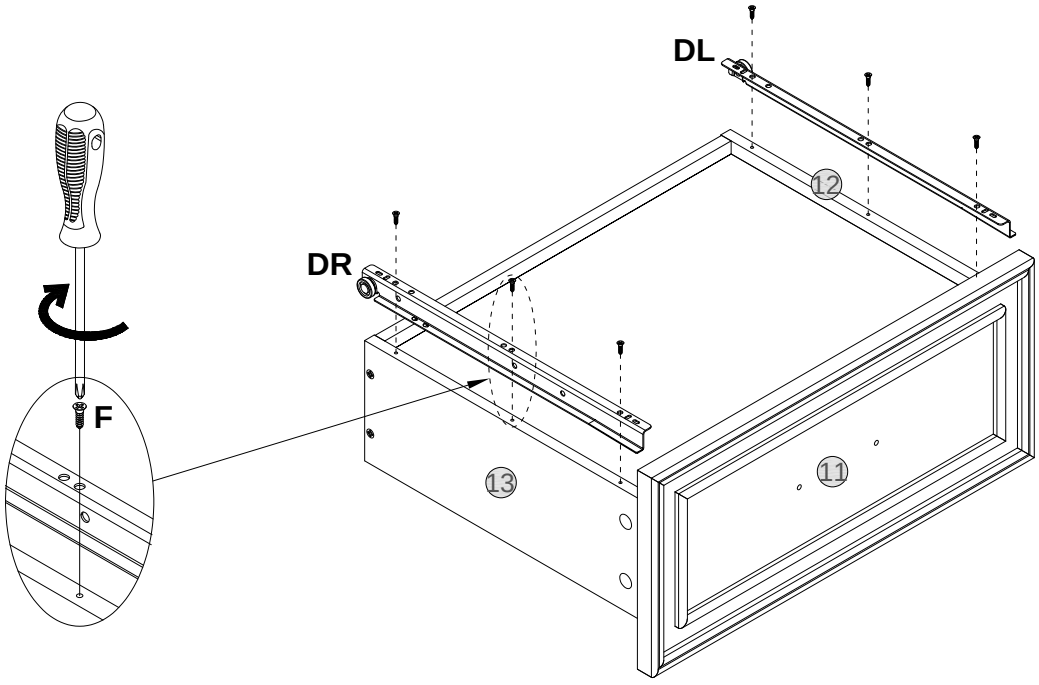

x2



12X
F

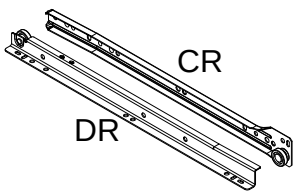

2X
Y

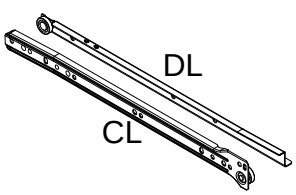

2X
L

ASSEMBLY INSTRUCTION

DESCRIPTION

6008WHT

Hampton Bedside Table

STEP 13

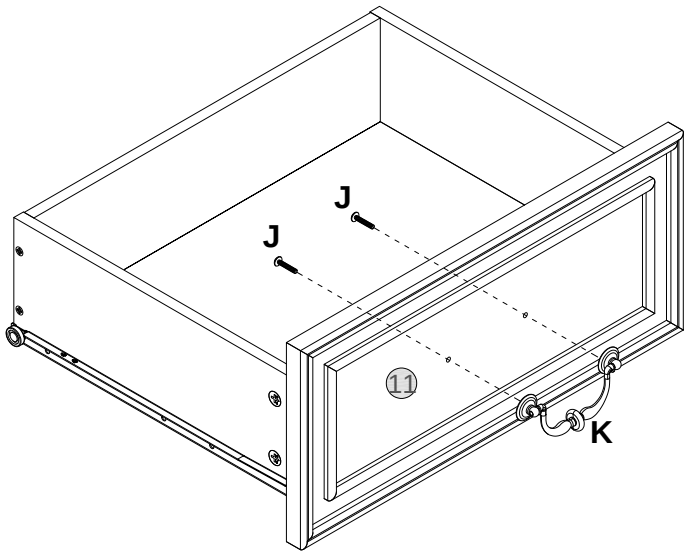

x2

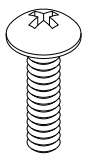

4X
J

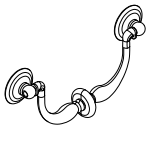

2X
K

ASSEMBLY INSTRUCTION

DESCRIPTION

6008WHT

Hampton Bedside Table

STEP 14

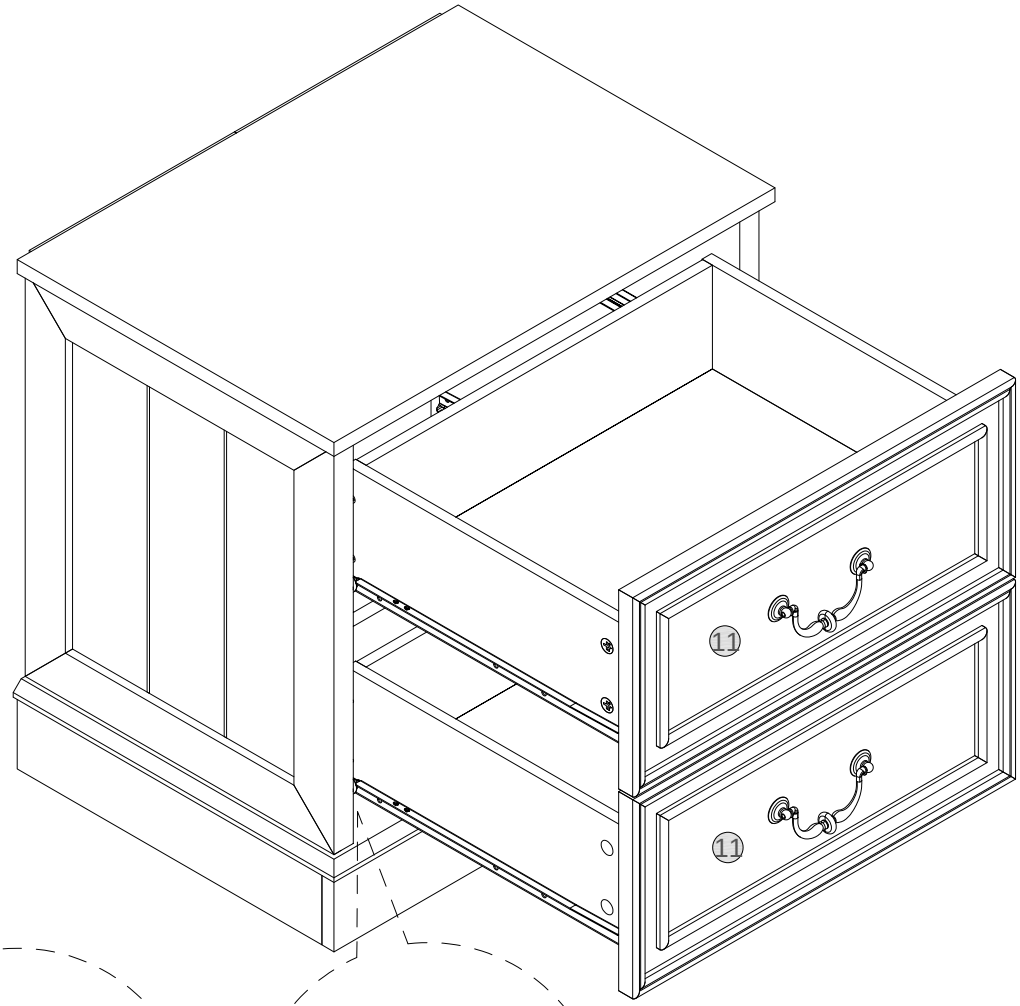

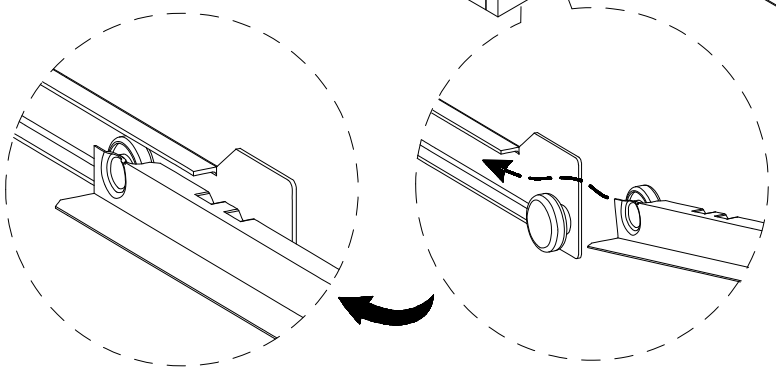

NOTE: If drawer gets stuck, avoid fotcing it open.Instead,please contact our customer care team for assistance.

ASSEMBLY INSTRUCTION

DESCRIPTION

6008WHT

Hampton Bedside Table

STEP 15

