ASSEMBLY INSTRUCTION

DESCRIPTION

8002

Byron Dinning Table

1.0 hr

APPROXIMATE ASSEMBLY TIME

2 PERSON ASSEMBLY

FLOOR AREA
2MX2M

REQUIRED ASSEMBLY SPACE

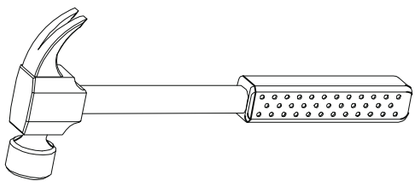

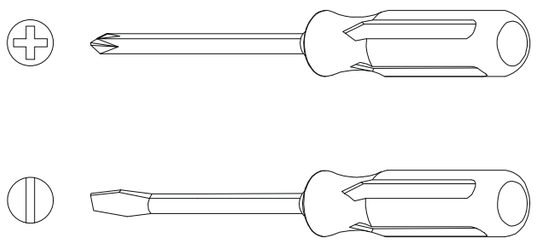

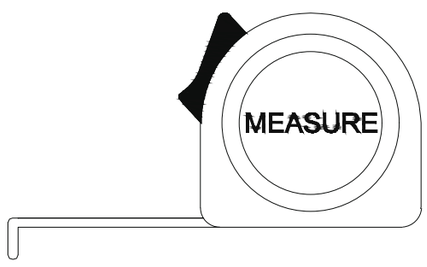

REQUIRED ASSEMBLY TOOLS

ASSEMBLED DIMENSIONS

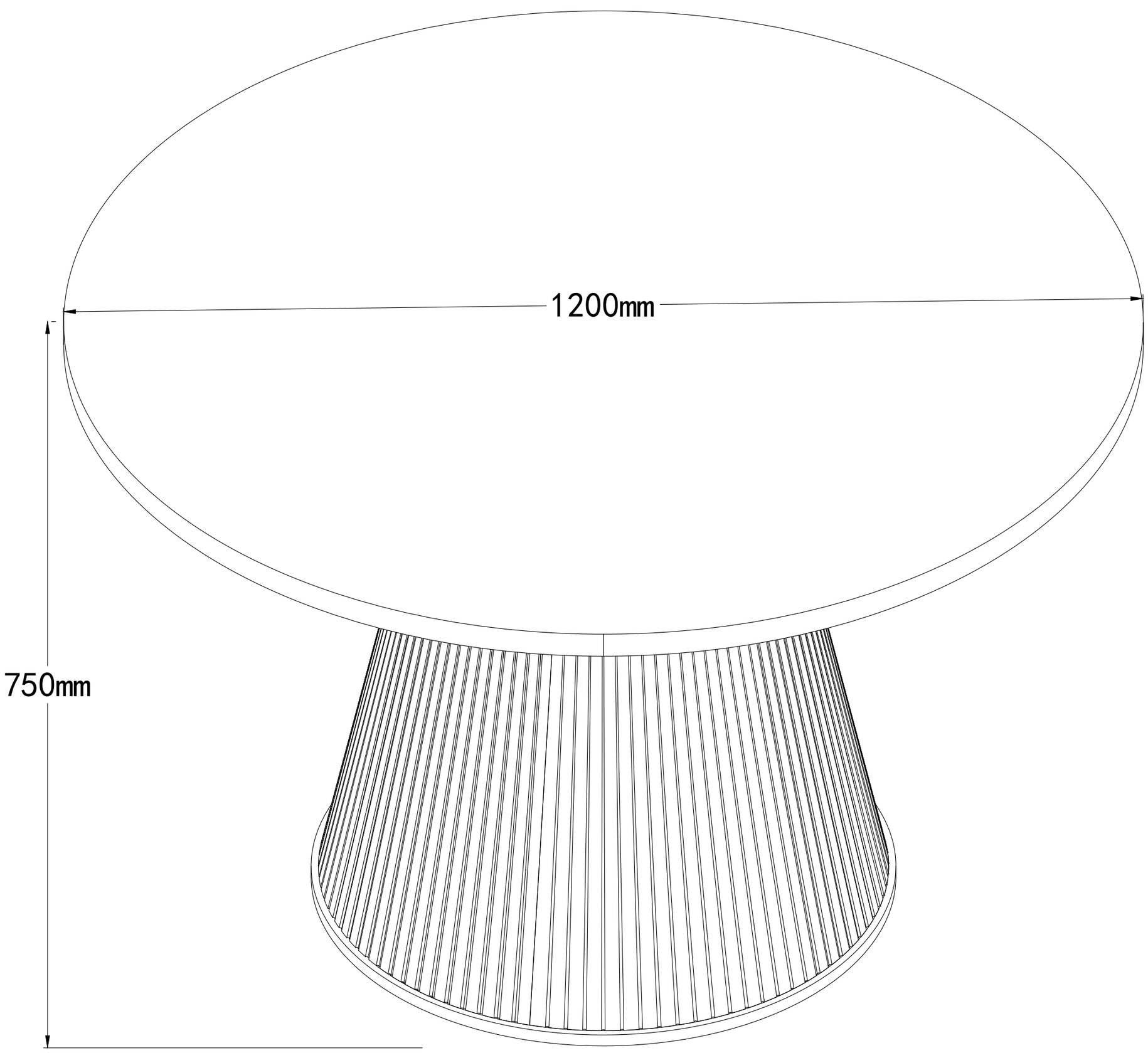

ASSEMBLY INSTRUCTION

DESCRIPTION

8002

Byron Dinning Table

PARTS LIST

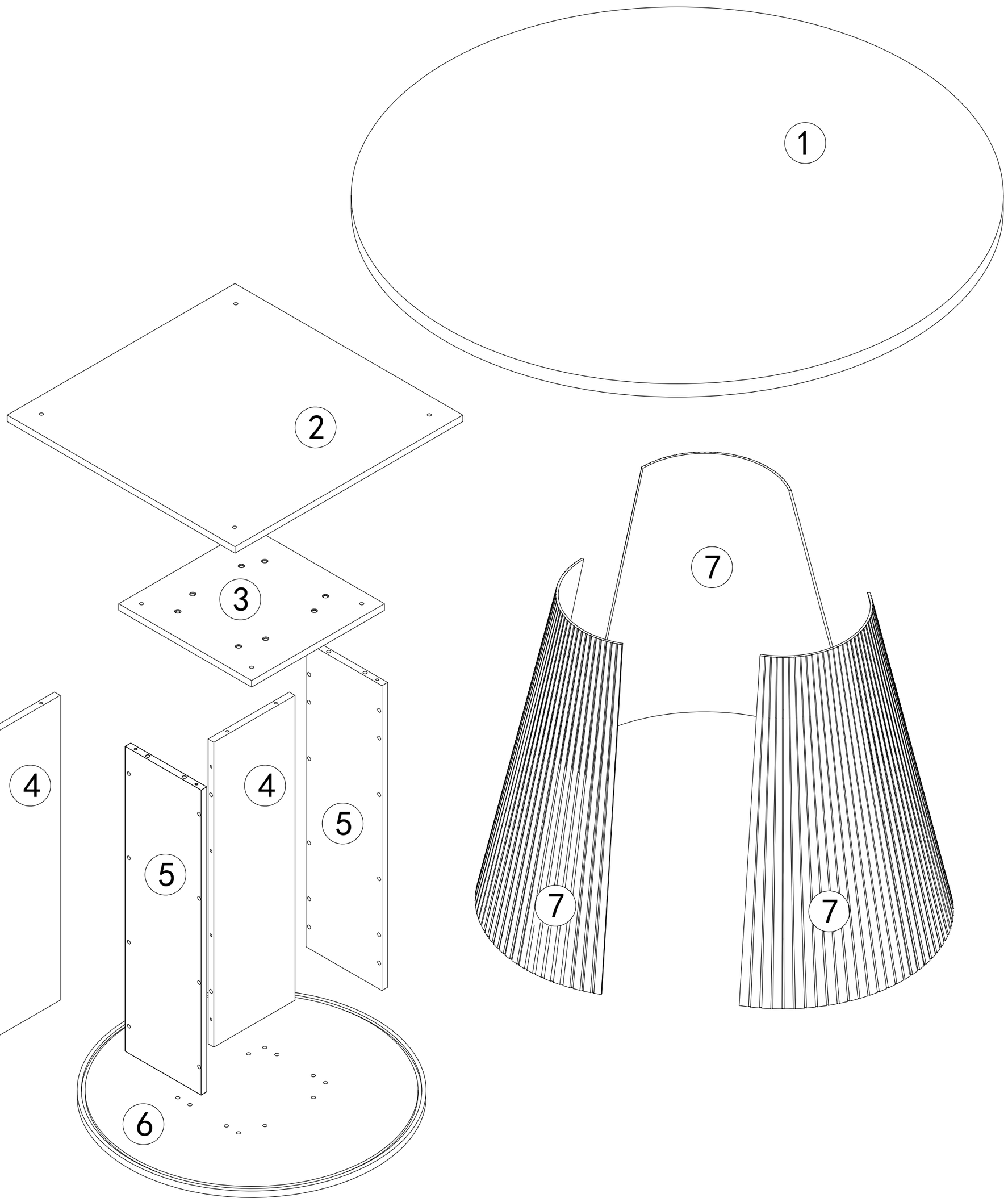

NO.PARTS LIST QTY

(1)	Part	1
(2)	Part	1
(3)	Part	1
(4)	Part	2
(5)	Part	2
(6)	Part	1
(7)	Part	3

ASSEMBLY INSTRUCTION

DESCRIPTION

8002

Byron Dinning Table

HARDWARE LIST

A	x8	B	x16	C	x32	D	x1	E	x5
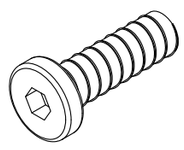		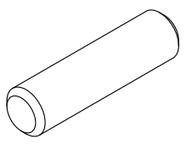		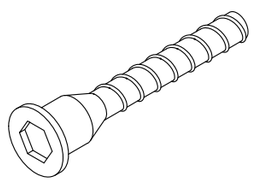		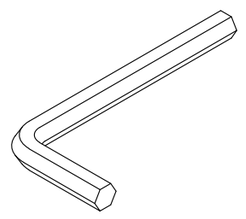		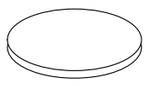	
M6*20mm		Ø8*30mm		ϕ7*50mm		M4			

ASSEMBLY INSTRUCTION

DESCRIPTION

8002

Byron Dinning Table

Top Tips before you start!

1. Please check that all parts are present before you start the assembly of your furniture, as once assembled,the furniture is exempt from our home approval policy.

2. For ease and speed of assembly,we recommend that before you commence each step of the assembly,that you identify all the parts required for that step.

3. For larger items,please ensure that you have sufficient space and people(as indicated on page 1) to assemble your product safely.

4. We recommend that,where possible,all items are assembled near to the area in which they will be placed in use,to avoid moving the product unnecessarily once assembled.

5. For the protection of your furniture,particularly items of high gloss finish,we recommend that the product is placed on a protected surface during assembly to prevent any damage.

6. During assembly please take care not to over-tighten any fittings,as this may damage the product.

Care and Maintenance of your Furniture

- Please periodically check all fittings and re-tighten as necessary.
- Please do not drag or pull your furniture.
- Wipe occasionally with a soft cloth slightly dampened with water.Then buff with a dry clean soft cloth.
- Never allow any kind of liquid to remain on your furniture.Absorption can cause wood to warp or finishes to de-laminate.
- Please do not sit or stand on this item.

SPECIAL TIPS FOR FITTING CAM-LOCKS AND CAM-BOLTS

CAM-LOCK

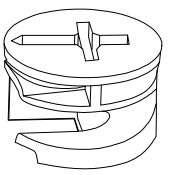

WHEN FITTING CAMS

ENSURE STARTING POSITION IS CORRECT
BEFORE YOU INSERT CONNECTING CAM-BOLTS
TURN CLOCKWISE UNTIL SECURE

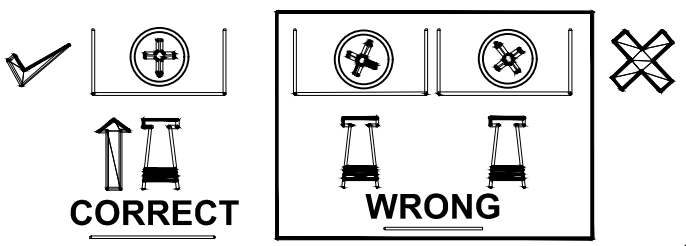

Align with long point of cross

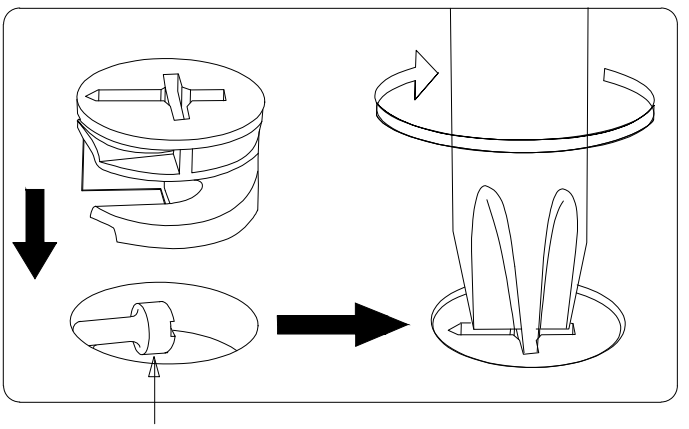

Lock head needs to be in centre

CAM-BOLT

Tighten until shoulder is flush with panel.Do not overtighten or undertighten (see example below)

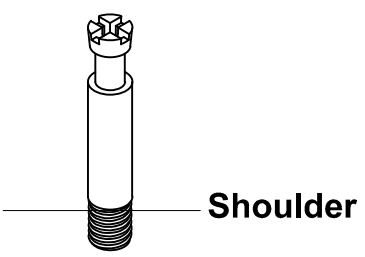

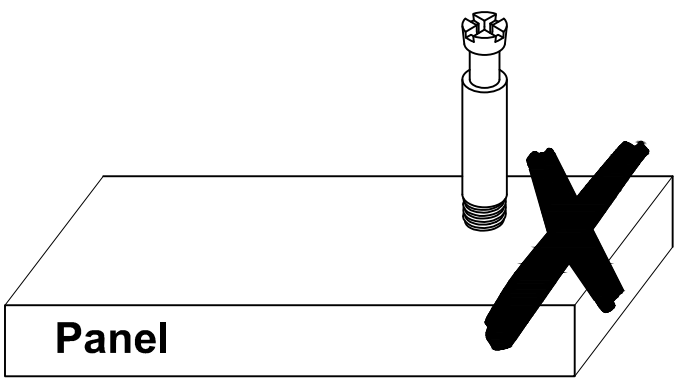

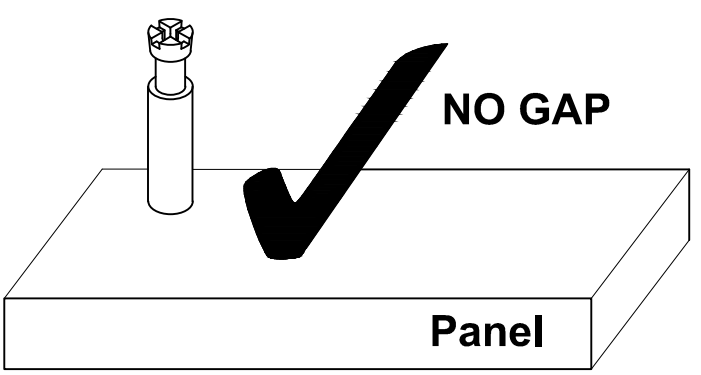

ASSEMBLY INSTRUCTION

DESCRIPTION

8002

Byron Dinning Table

STEP 1

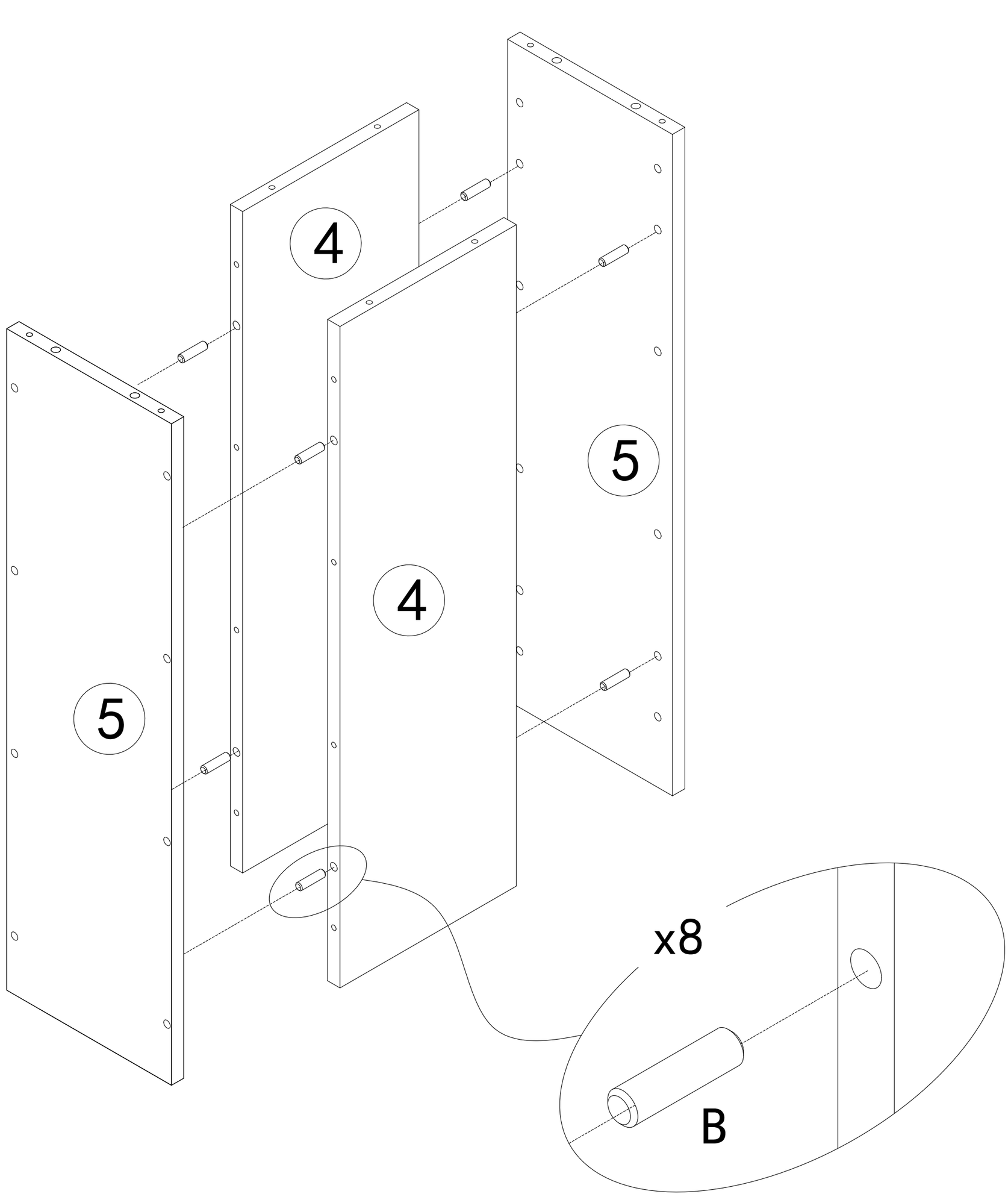

B	x8
Ø8*30mm	

ASSEMBLY INSTRUCTION

DESCRIPTION

8002

Byron Dinning Table

STEP 2

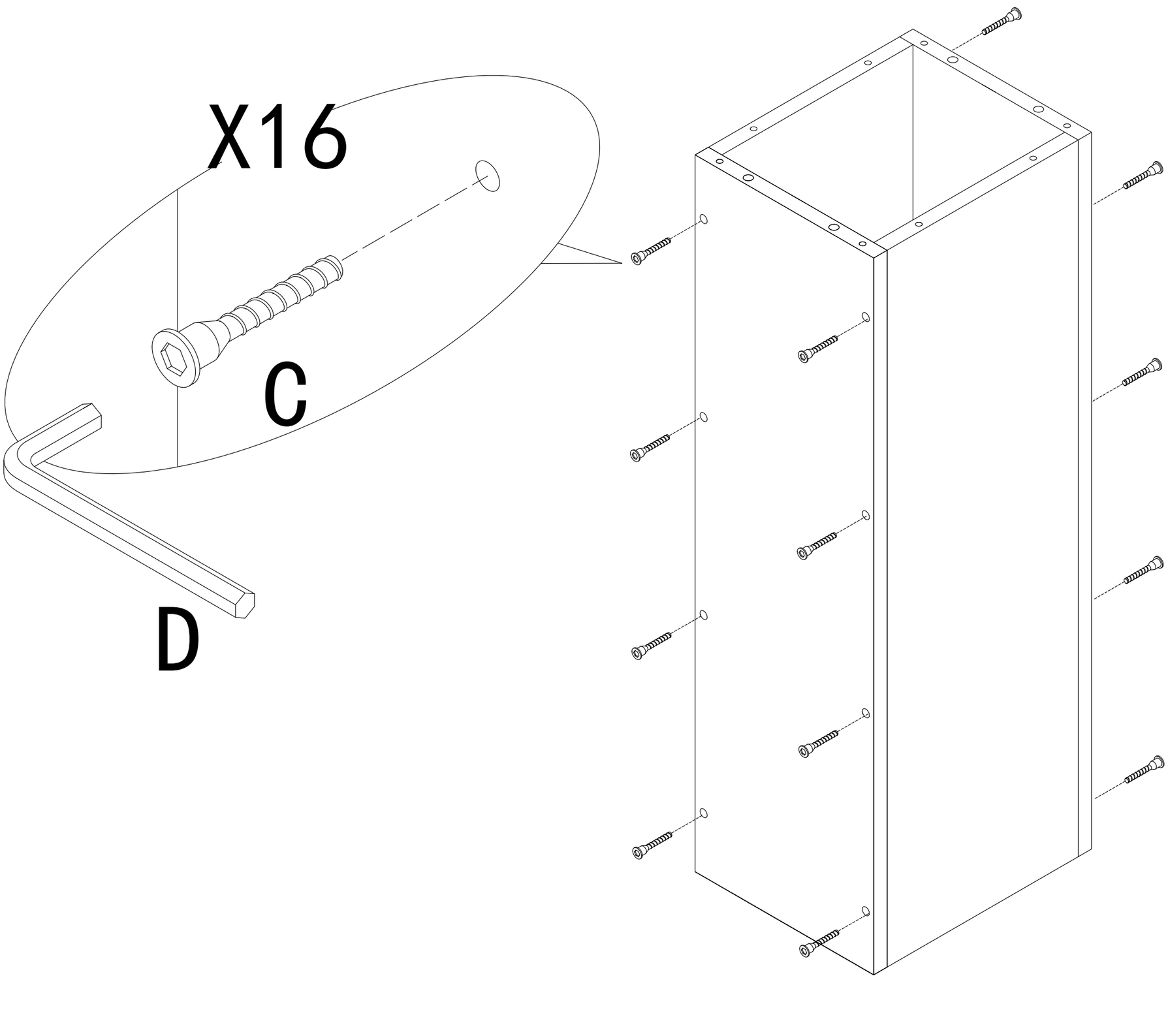

D	x1	C	x16
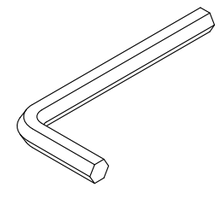		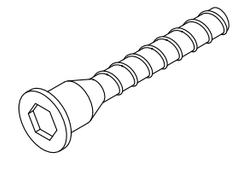	
M4		ø7*50mm	

ASSEMBLY INSTRUCTION

DESCRIPTION

8002

Byron Dinning Table

STEP 3

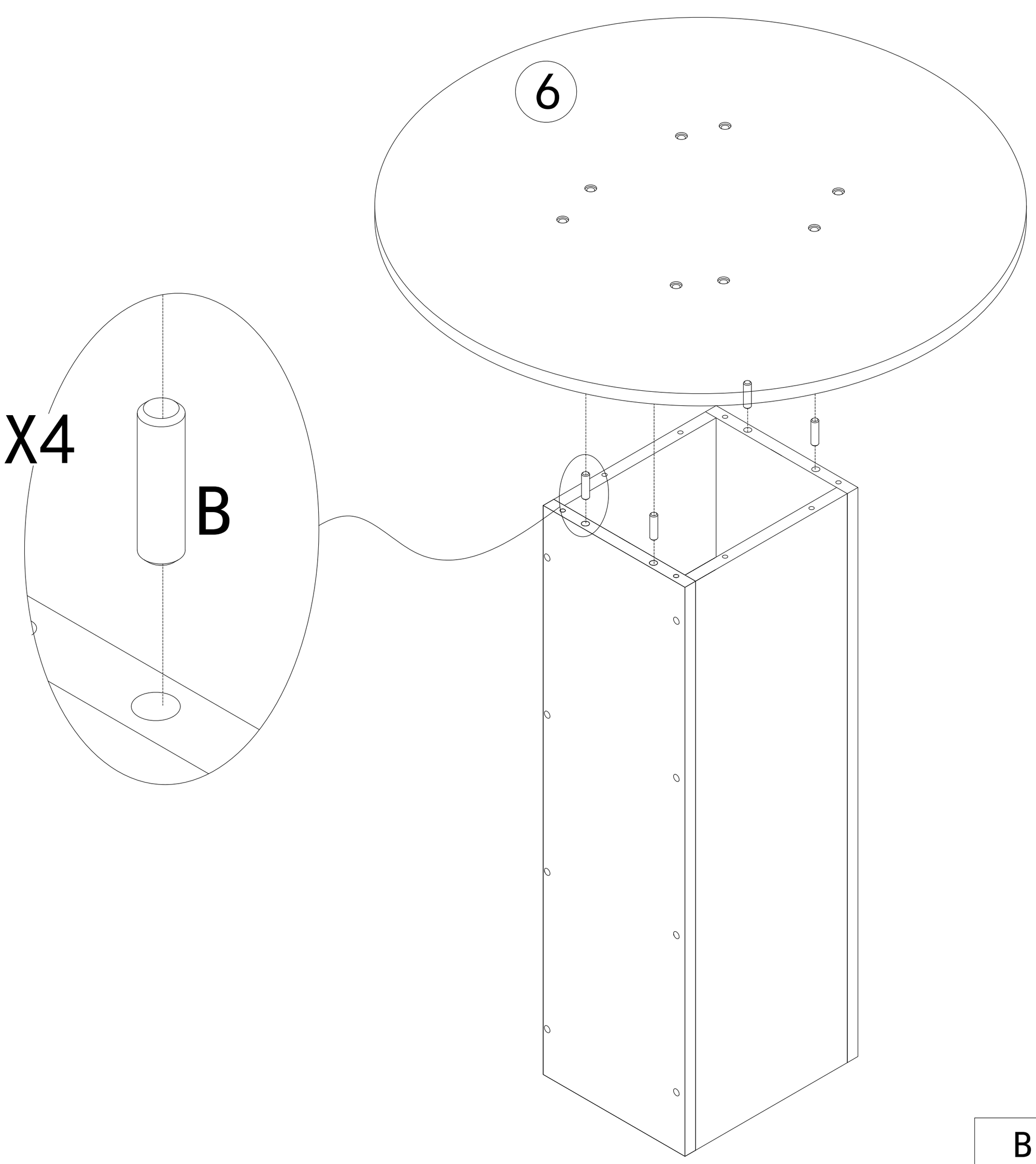

B	x4
Ø8*30mm	

ASSEMBLY INSTRUCTION

DESCRIPTION

8002

Byron Dinning Table

STEP 4

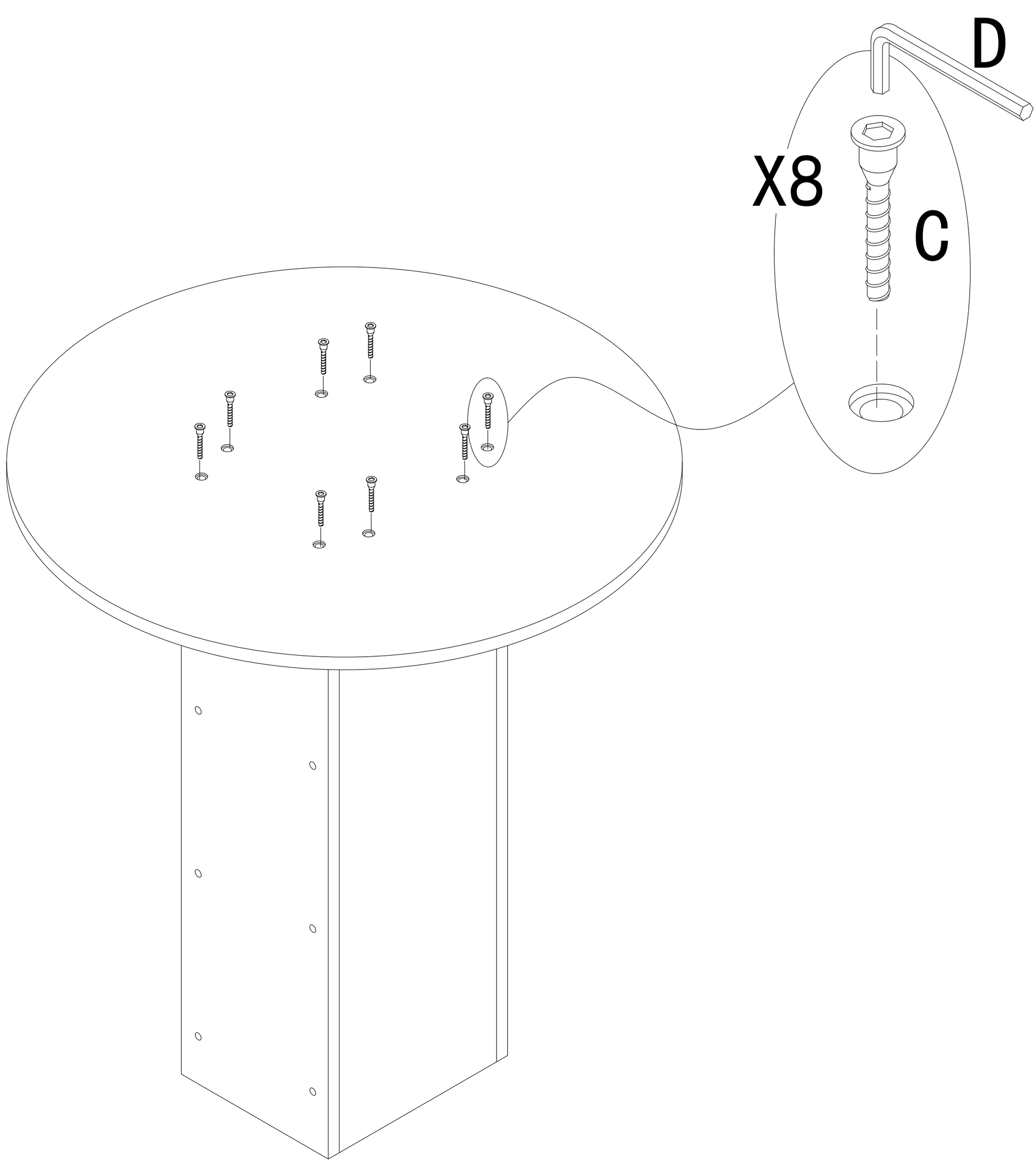

D	x1	C	x8
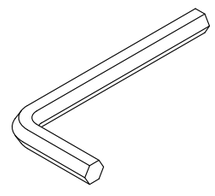		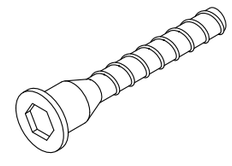	
M4		ø7*50mm	

ASSEMBLY INSTRUCTION

DESCRIPTION

8002

Byron Dinning Table

STEP 5

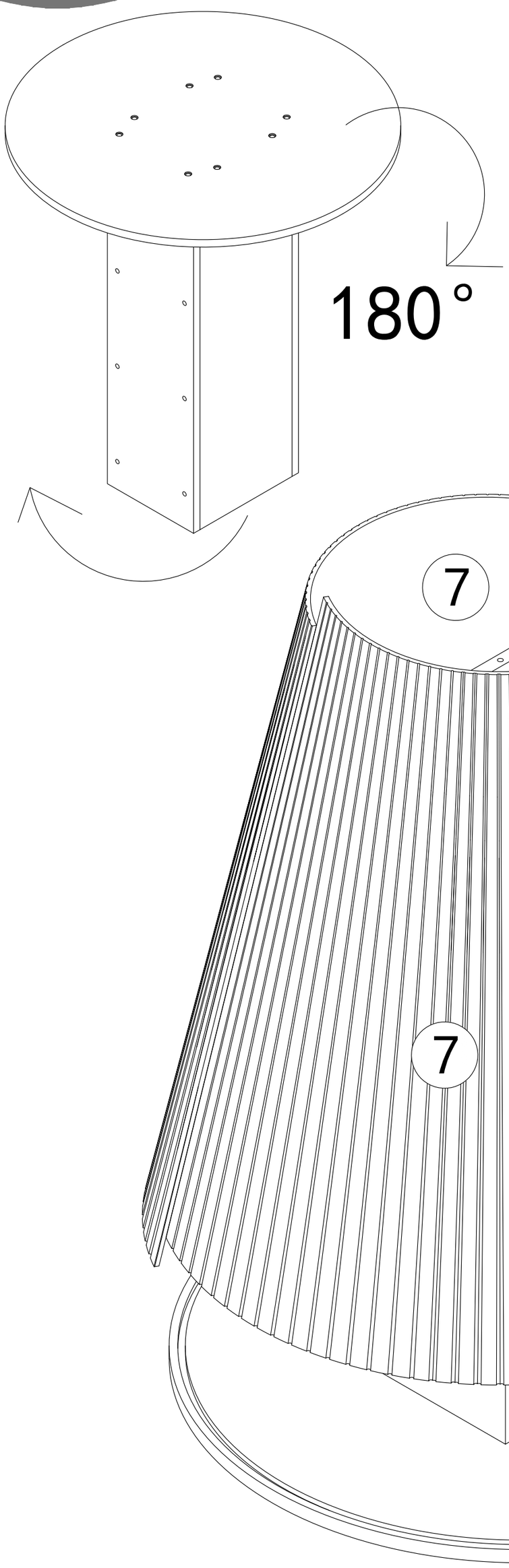

ASSEMBLY INSTRUCTION

DESCRIPTION

8002

Byron Dinning Table

STEP 6

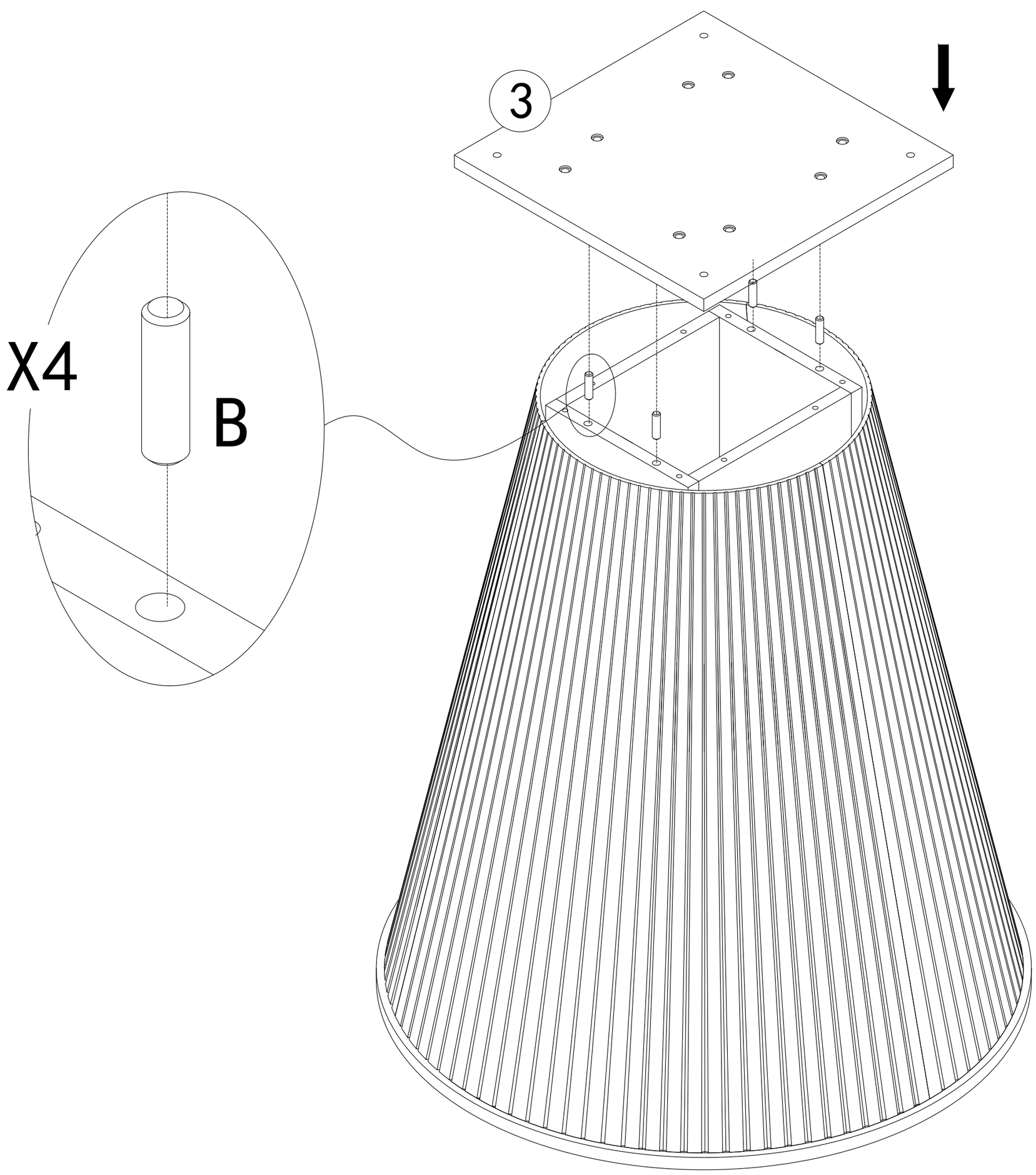

B	x4

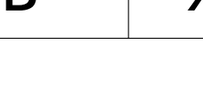

Ø8*30mm

ASSEMBLY INSTRUCTION

DESCRIPTION

8002

Byron Dinning Table

STEP 7

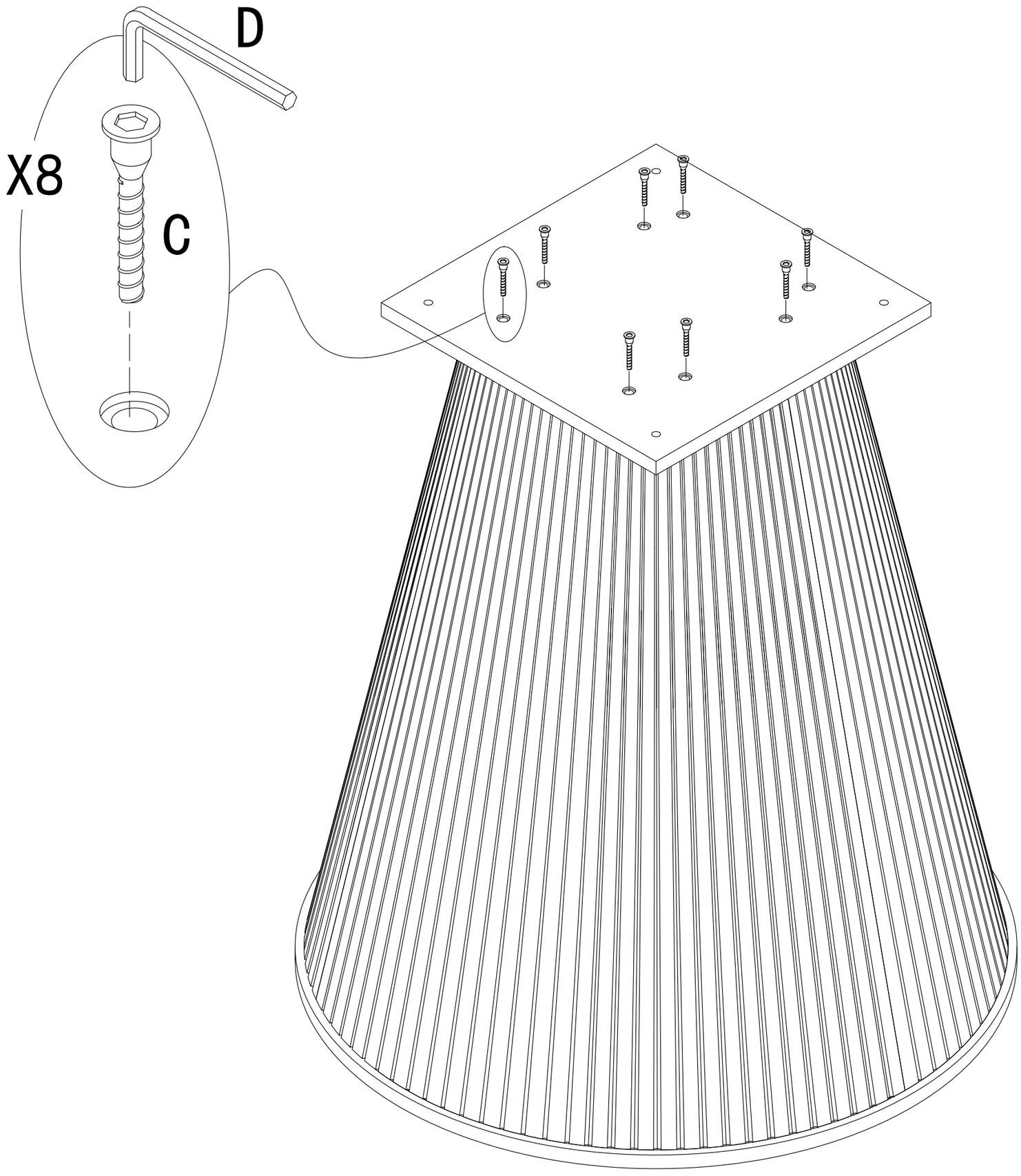

D	x1	C	x8
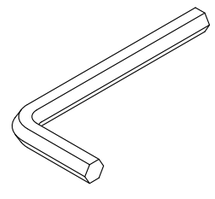		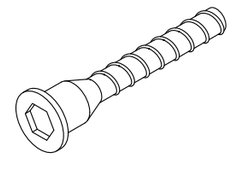	
M4		ϕ7*50mm	

ASSEMBLY INSTRUCTION

DESCRIPTION

8002

Byron Dinning Table

STEP 8

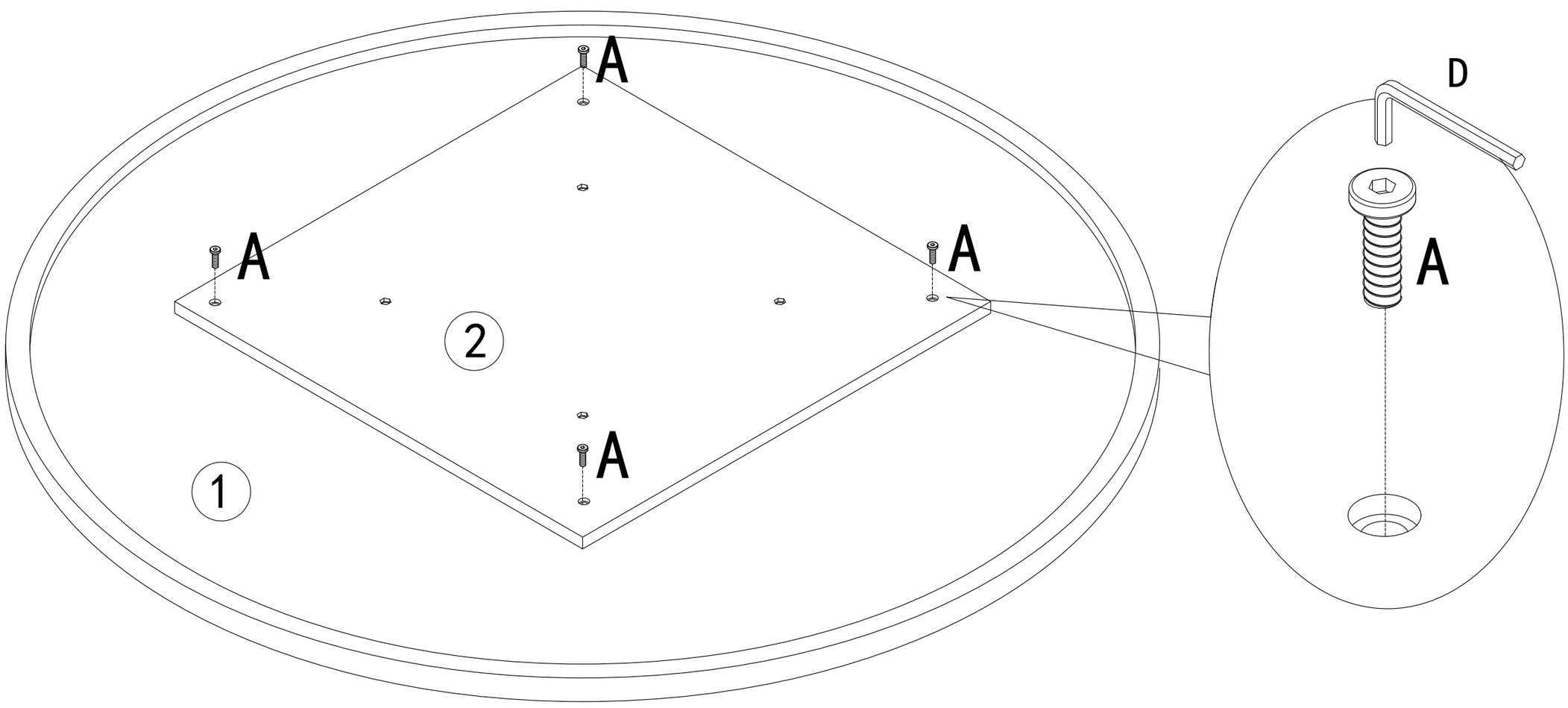

A	x4	D	x1
		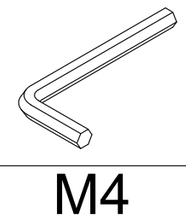	
M6*20mm		M4	

ASSEMBLY INSTRUCTION

DESCRIPTION

8002

Byron Dinning Table

STEP 9

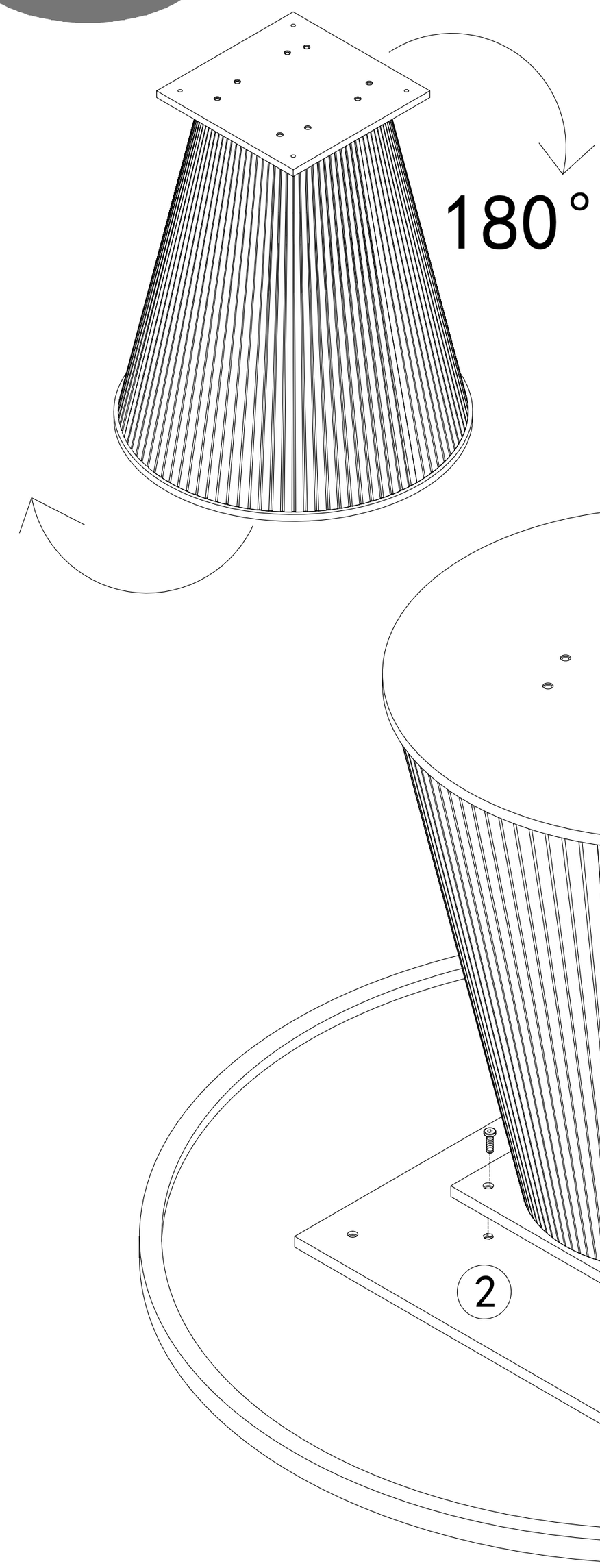

A	x4	D	x1
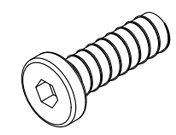		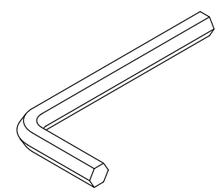	
M6*20mm		M4	

ASSEMBLY INSTRUCTION

DESCRIPTION

8002

Byron Dinning Table

STEP 10

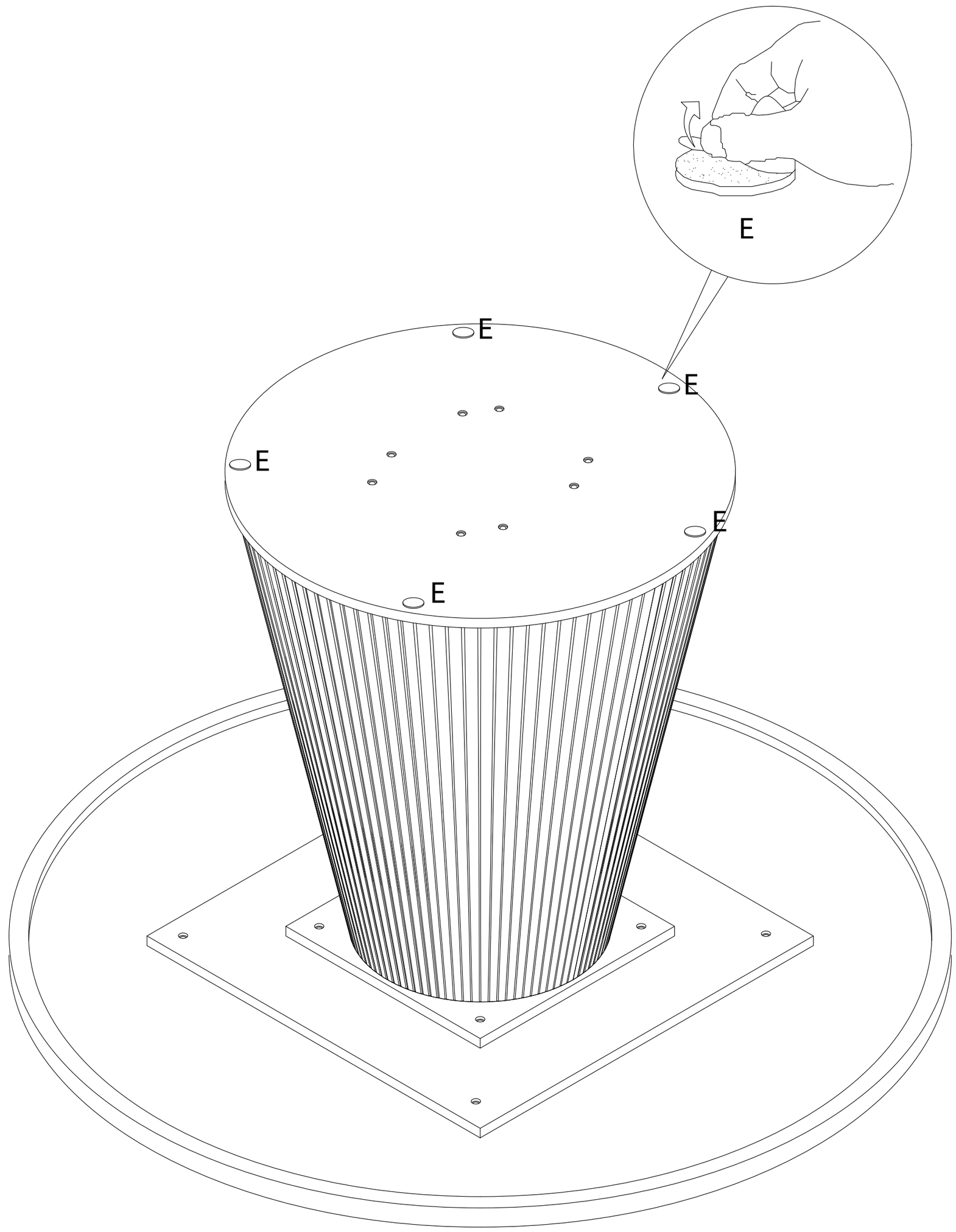

E	x5
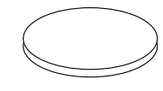	

ASSEMBLY INSTRUCTION

DESCRIPTION

8002

Byron Dinning Table

STEP 11

Good Job!

