ASSEMBLY INSTRUCTION

DESCRIPTION

9727

Grayson Bedside Table

1.0 hr

APPROXIMATE ASSEMBLY TIME

2 PERSON ASSEMBLY

FLOOR AREA 2MX2M

REQUIRED ASSEMBLY SPACE

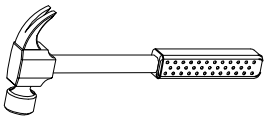

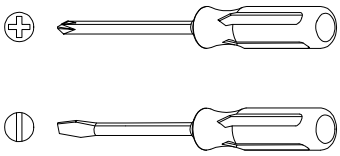

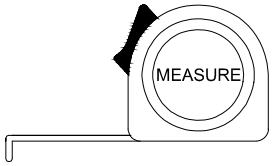

REQUIRED ASSEMBLY TOOLS

ASSEMBLED DIMENSIONS

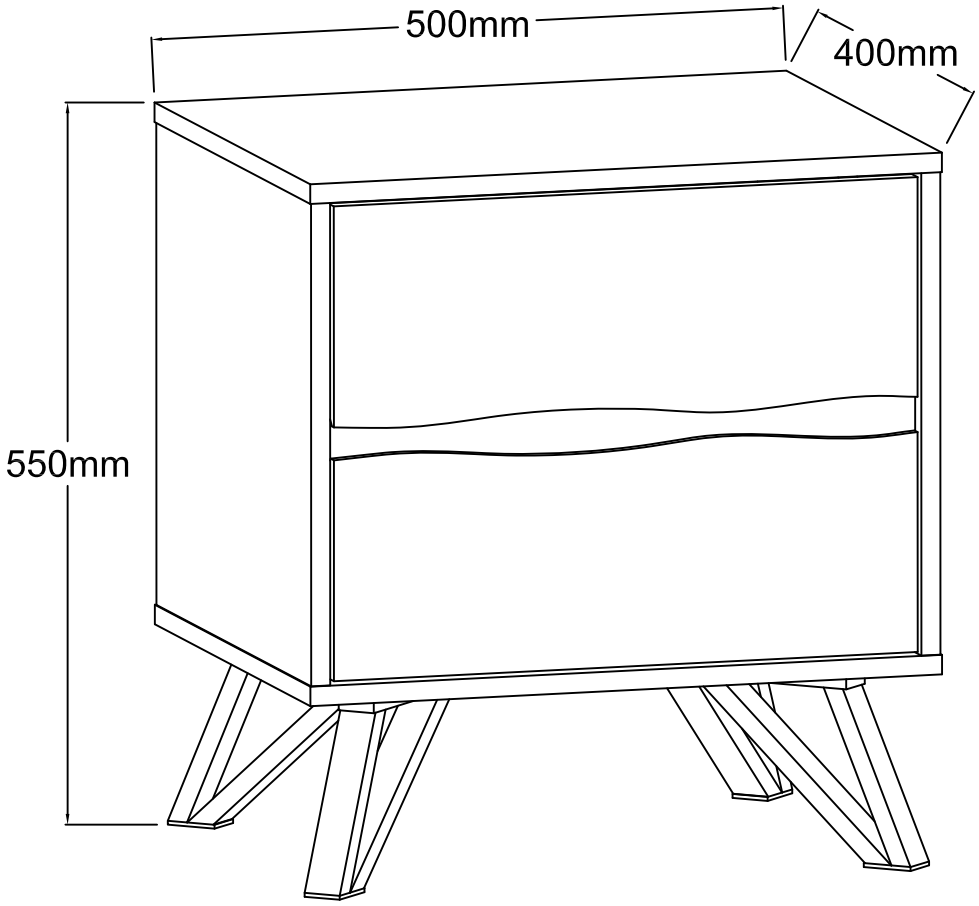

ASSEMBLY INSTRUCTION

DESCRIPTION

9727

Grayson Bedside Table

PARTS LIST

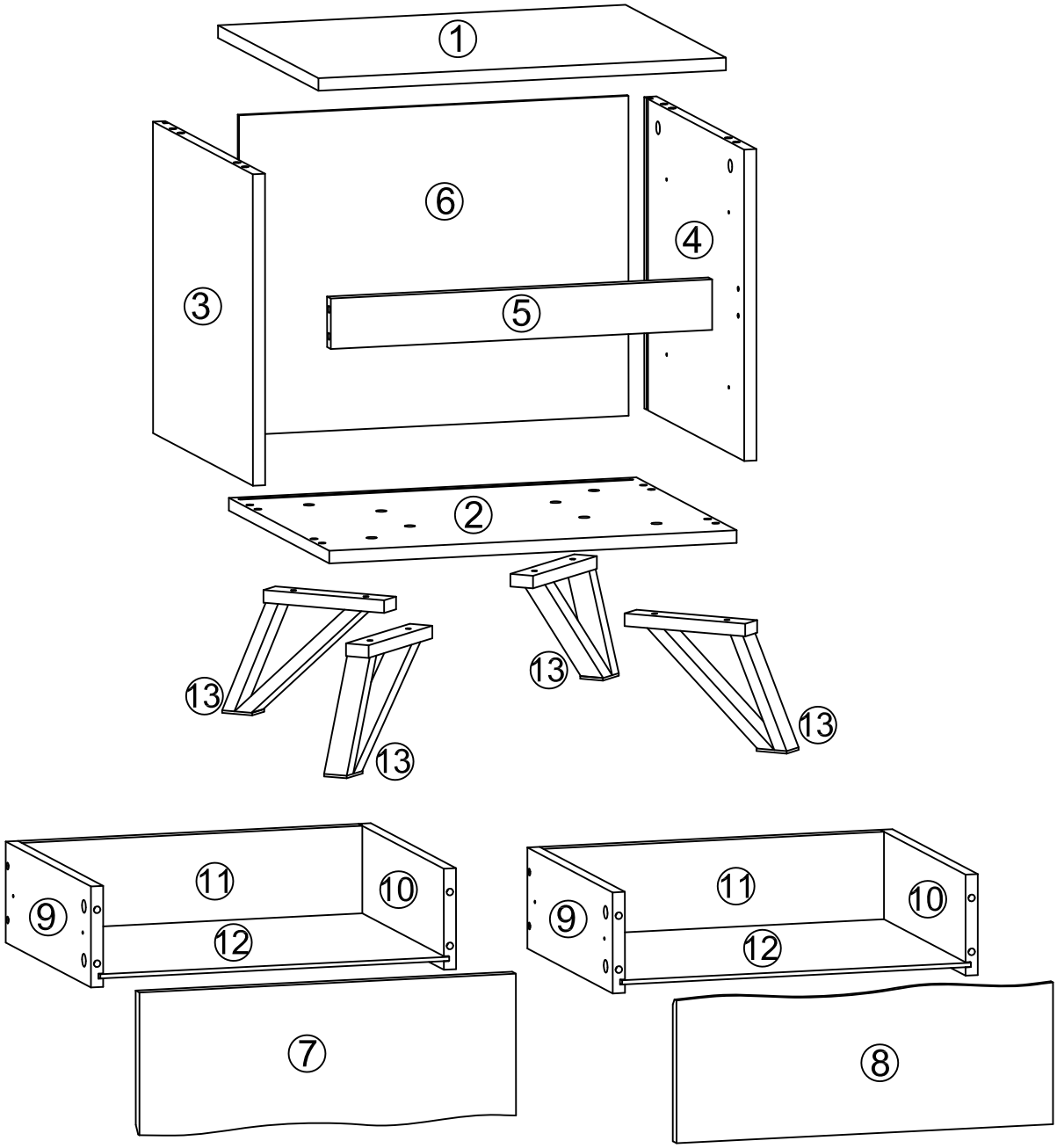

NO.	PARTS LIST	QTY
(1)	Part 1	1
(2)	Part 2	1
(3)	Part 3	1
(4)	Part 4	1
(5)	Part 5	1
(6)	Part 6	1
(7)	Part 7	1

NO.	PARTS LIST	QTY
(8)	Part 8	1
(9)	Part 9	2
(10)	Part 10	2
(11)	Part 11	2
(12)	Part 12	2
(13)	Part 13	4

ASSEMBLY INSTRUCTION

DESCRIPTION

9727

Bedside table

HARDWARE LIST

A x16	B x16	C x4	D x8	E x20	F x4	G x8	H x4
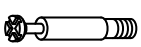							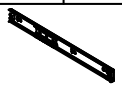
M6*35mm	ϕ15mm	M7*50mm	ϕ8*30mm	ϕ3.5*14mm		M4*35mm	340mm

I x4	J x8	K x8	L x1	M x4
				
340mm	ϕ20	M6*20		

ASSEMBLY INSTRUCTION

DESCRIPTION
9727
Grayson Bedside Table

Top Tips before you start!

1. Please check that all parts are present before you start the assembly of your furniture, as once assembled,the furniture is exempt from our home approval policy.

2. For ease and speed of assembly,we recommend that before you commence each step of the assembly,that you identify all the parts required for that step.

3. For larger items,please ensure that you have sufficient space and people(as indicated on page 1) to assemble your product safely.

4. We recommend that,where possible,all items are assembled near to the area in which they will be placed in use,to avoid moving the product unnecessarily once assembled.

5. For the protection of your furniture,particularly items of high gloss finish,we recommend that the product is placed on a protected surface during assembly to prevent any damage.

6. During assembly please take care not to over-tighten any fittings,as this may damage the product.

Care and Maintenance of your Furniture

- Please periodically check all fittings and re-tighten as necessary.
- Please do not drag or pull your furniture.
- Wipe occasionally with a soft cloth slightly dampened with water.Then buff with a dry clean soft cloth.
- Never allow any kind of liquid to remain on your furniture.Absorption can cause wood to warp or finishes to de-laminate.
- Please do not sit or stand on this item.

SPECIAL TIPS FOR FITTING CAM-LOCKS AND CAM-BOLTS

CAM-LOCK

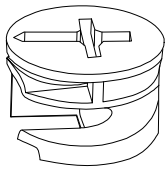

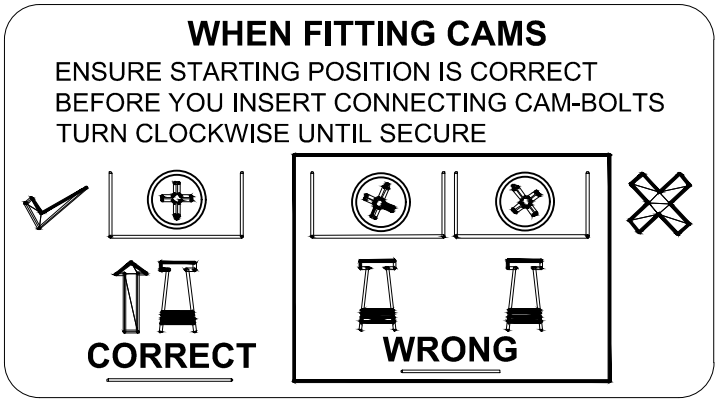

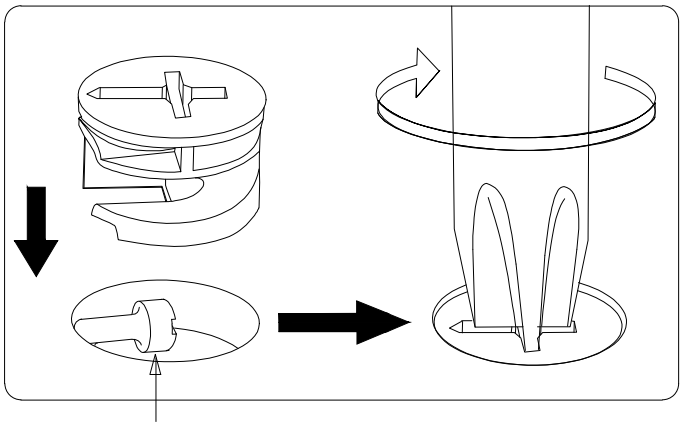

CAM-BOLT

Tighten until shoulder is flush with panel.Do not overtighten or undertighten (see example below)

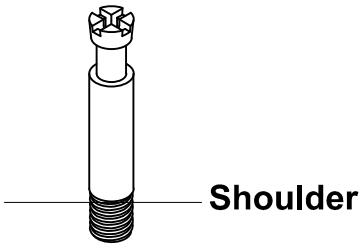

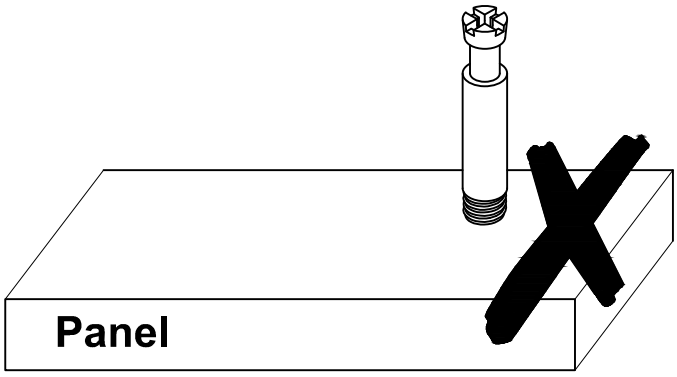

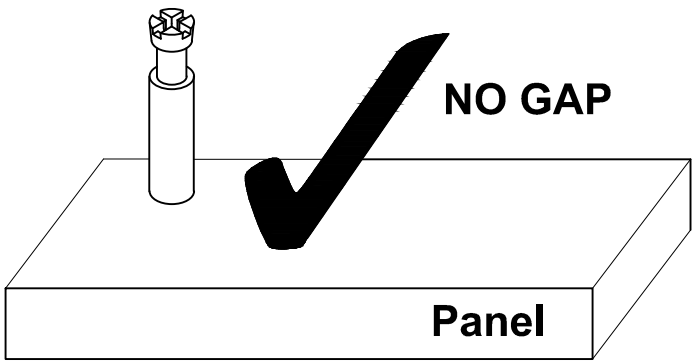

ASSEMBLY INSTRUCTION

DESCRIPTION

9727

Grayson Bedside Table

STEP 1

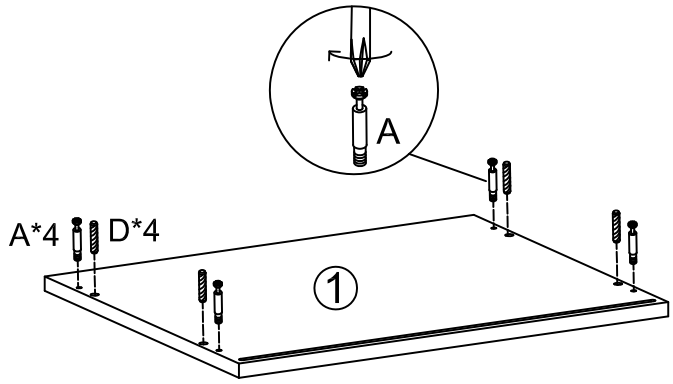

A	x4
M6*35mm	

D	x4
ϕ8*30mm	

STEP 2

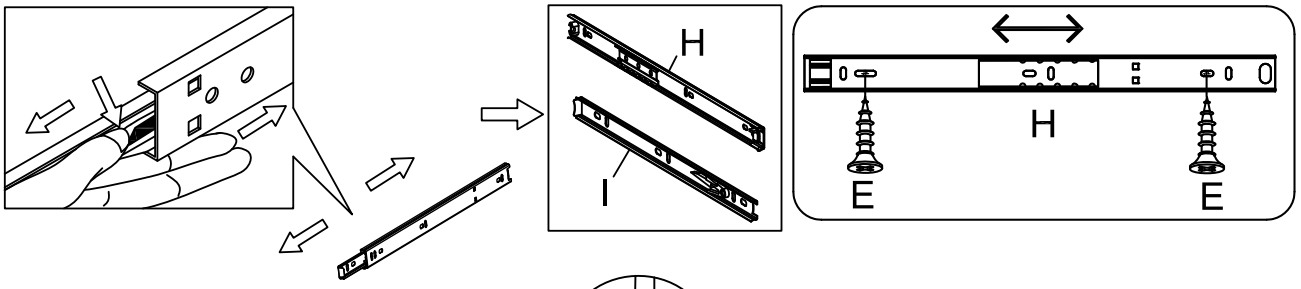

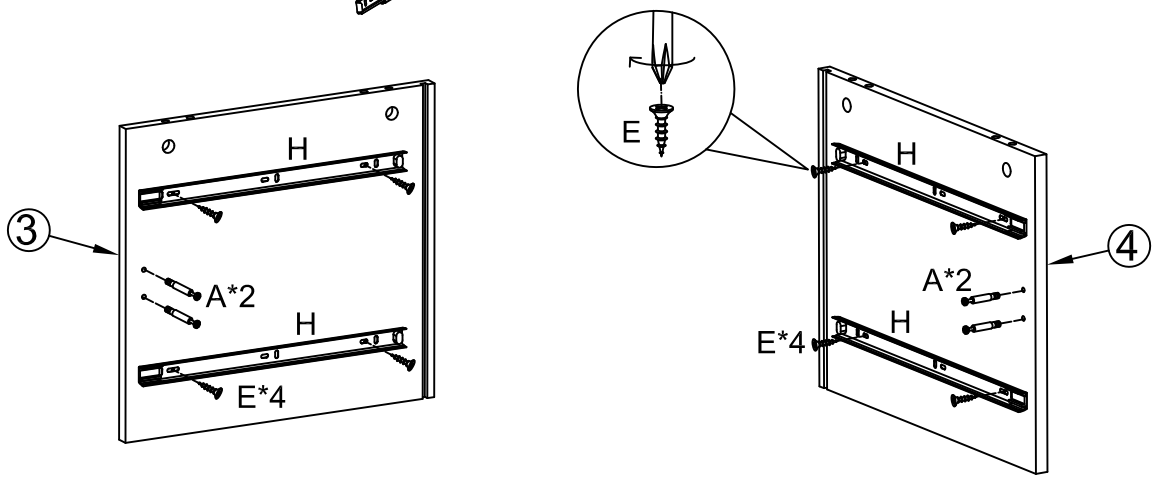

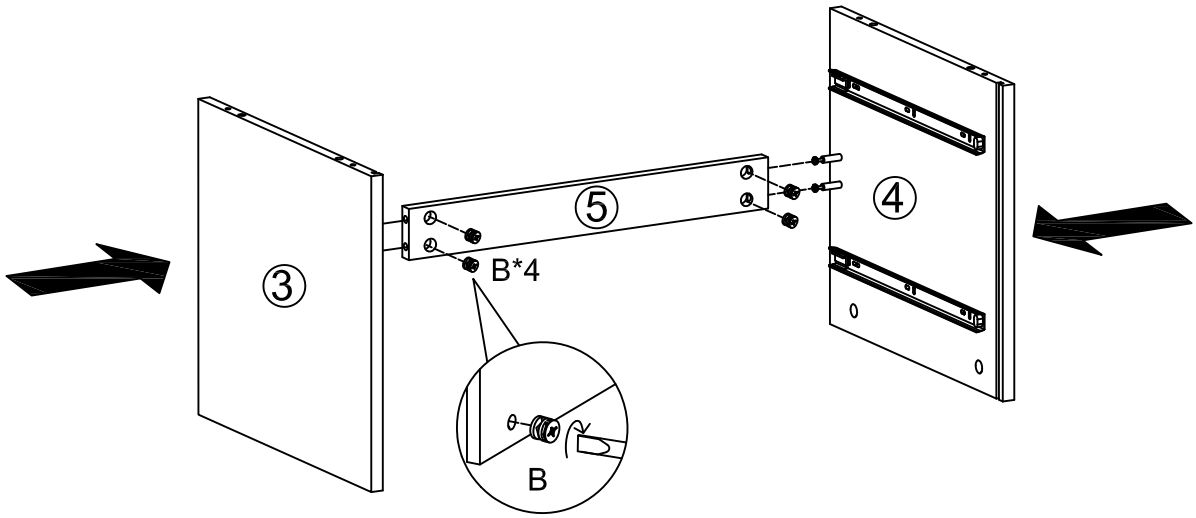

A	x4
M6*35mm	

B	x4
ϕ15mm	

E	x8
ϕ3.5*14mm	

H	x4
340mm	

ASSEMBLY INSTRUCTION

DESCRIPTION

9727

Grayson Bedside Table

STEP 3

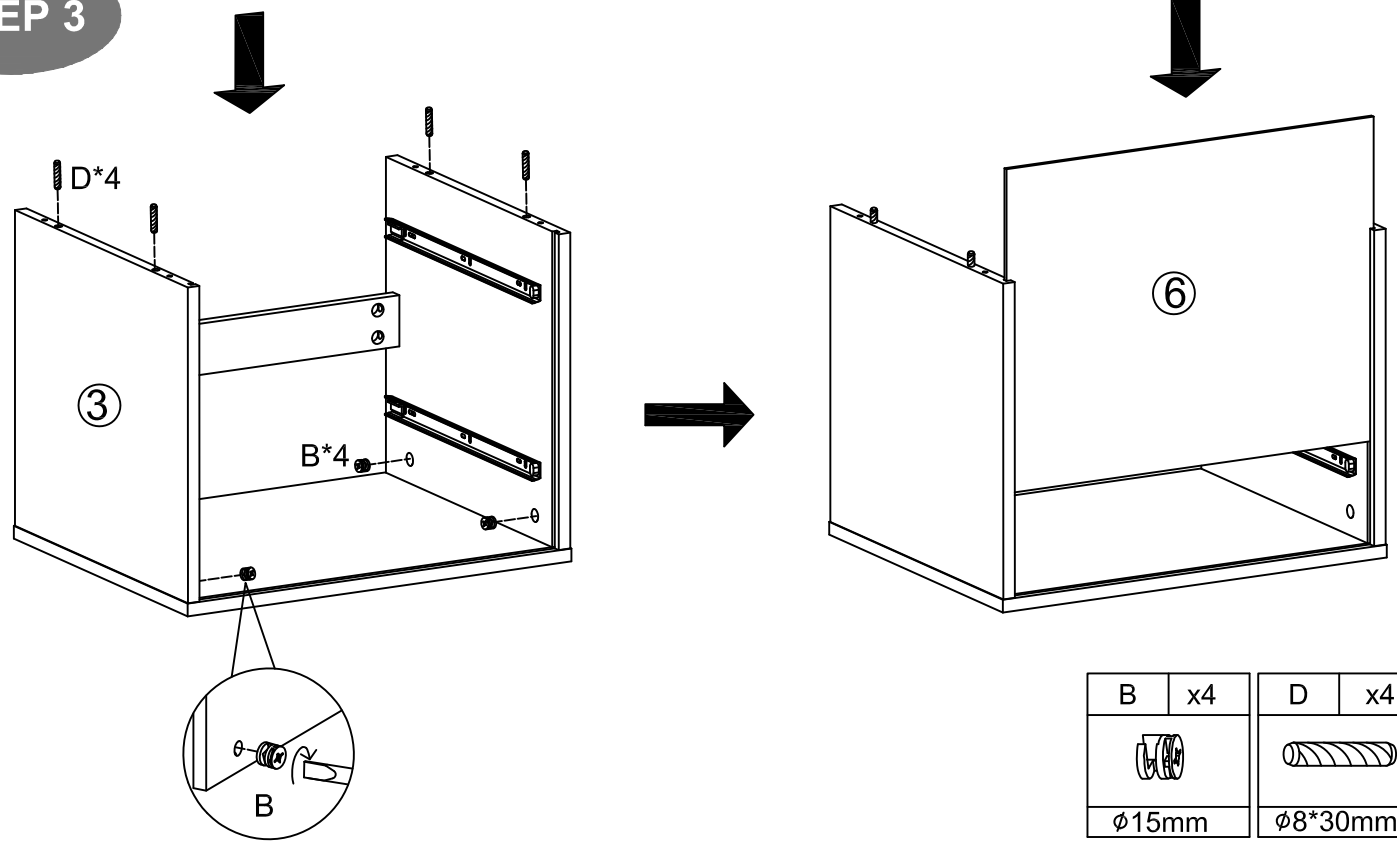

B	x4
ϕ15mm	

D	x4
ϕ8*30mm	

STEP 4

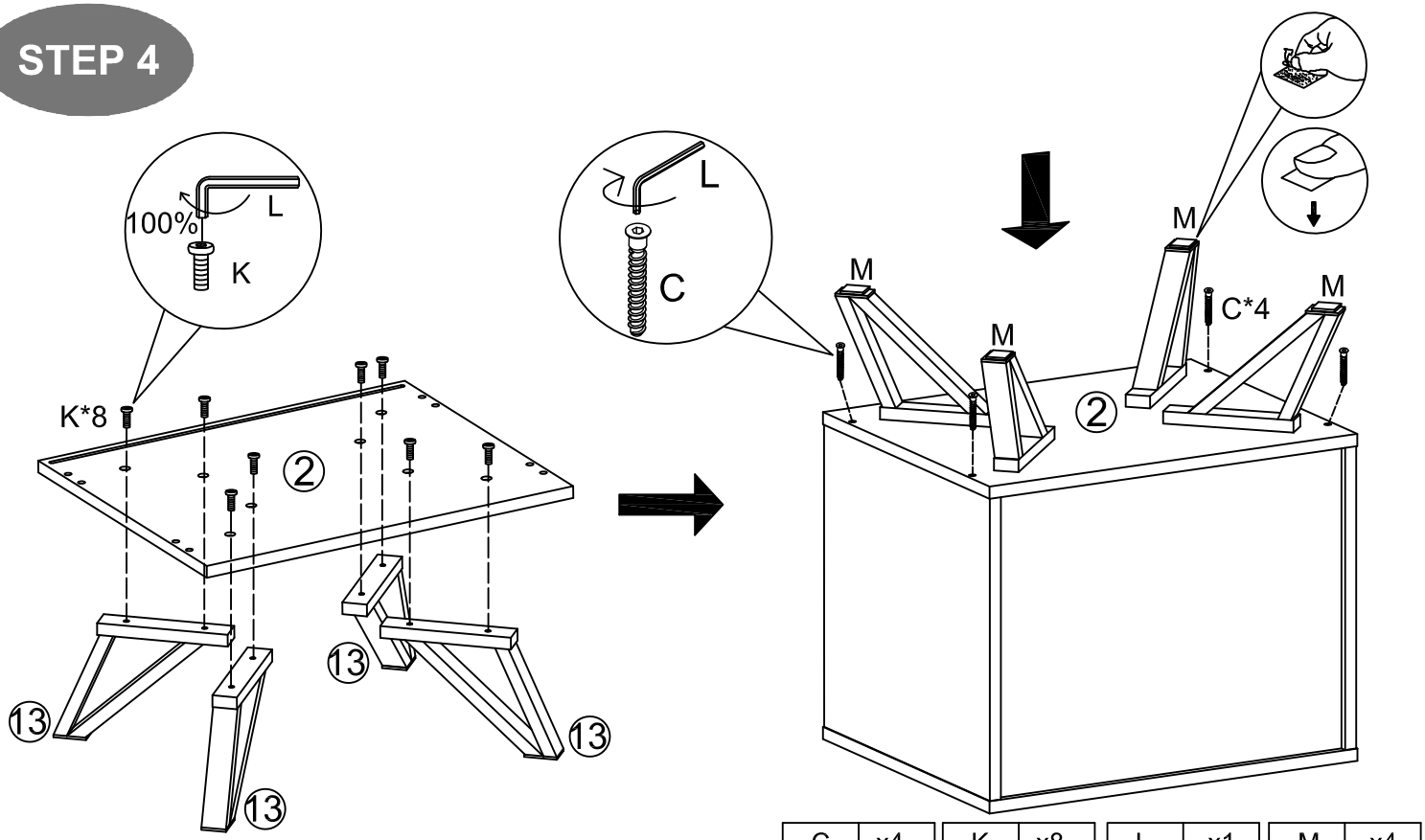

C	x4
M7*50mm	

K	x8
M6*20	

L	x1

M	x4

ASSEMBLY INSTRUCTION

DESCRIPTION

9727

Grayson Bedside Table

STEP 5

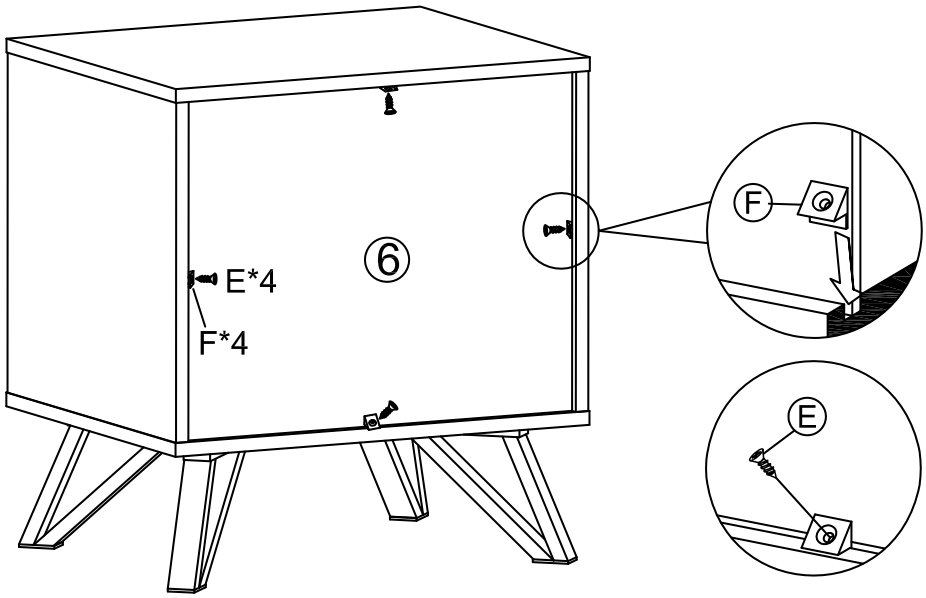

E	x4
ϕ3.5*14mm	

F	x4

STEP 6

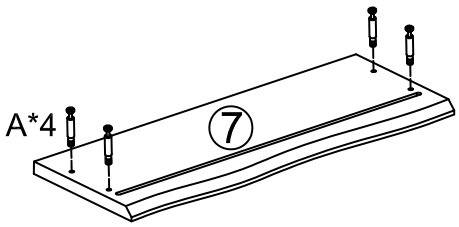

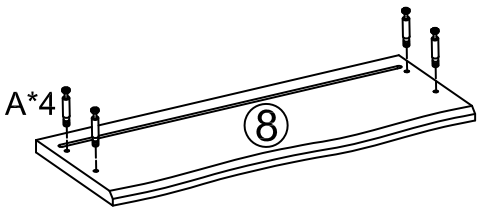

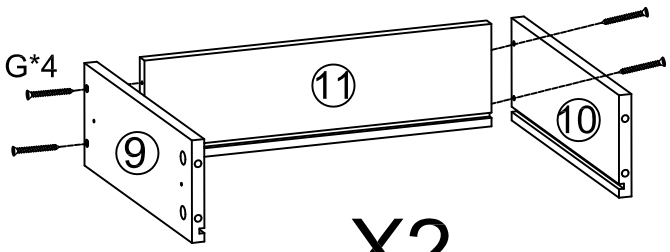

X2

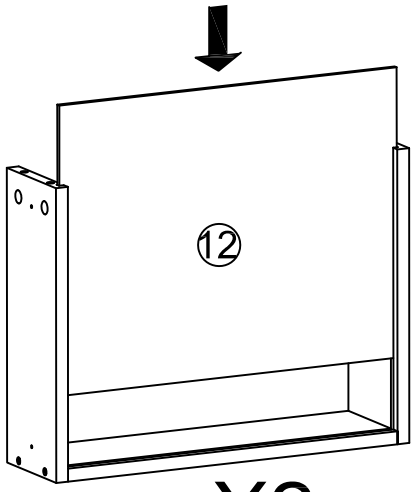

X2

A	x8
M6*35mm	

G	x8
M4*35mm	

ASSEMBLY INSTRUCTION

DESCRIPTION

9727

Grayson Bedside Table

STEP 7

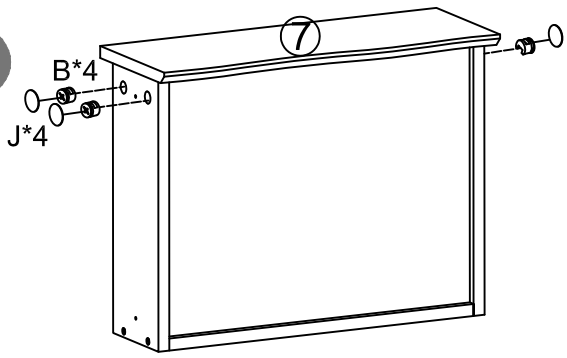

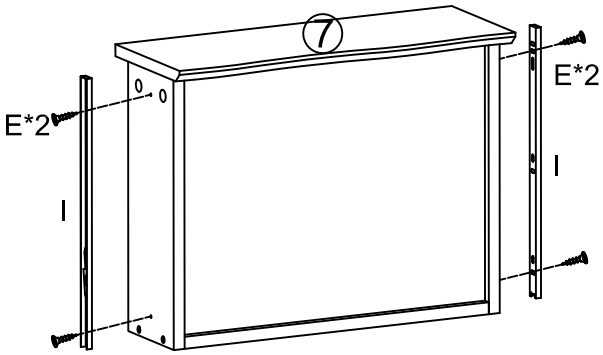

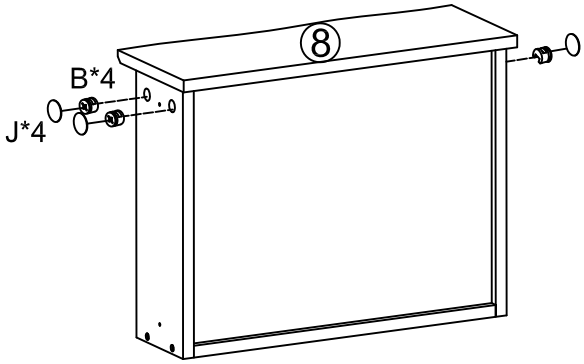

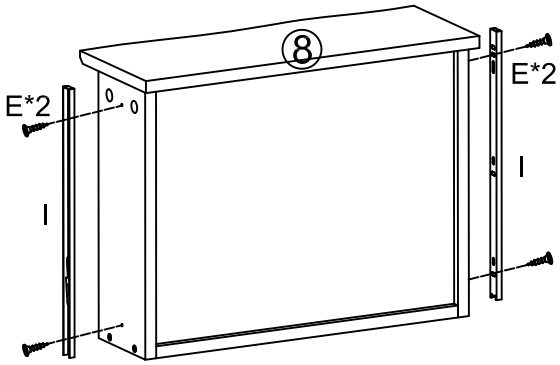

B	x8
ϕ15mm	

E	x8
ϕ3.5*14mm	

I	x4
340mm	

J	x8
ϕ20	

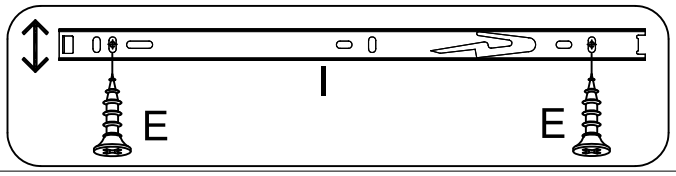

STEP 8

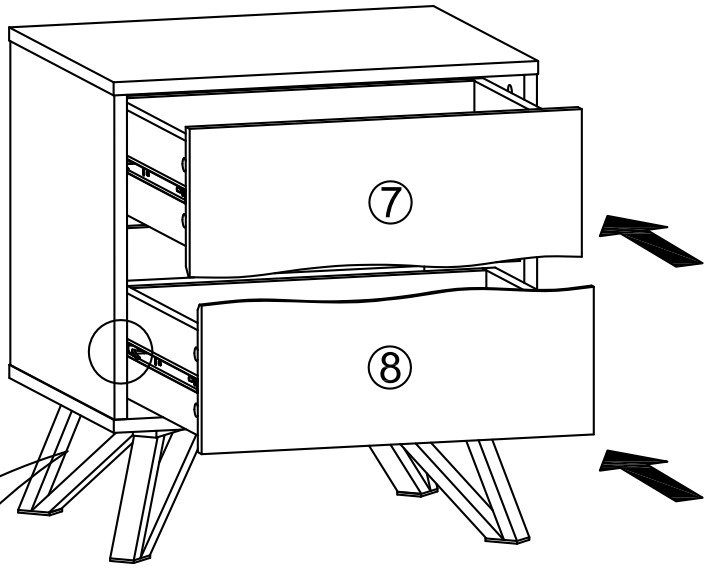

1.

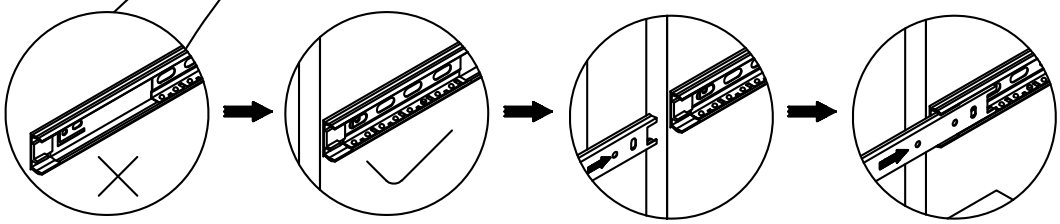

2.

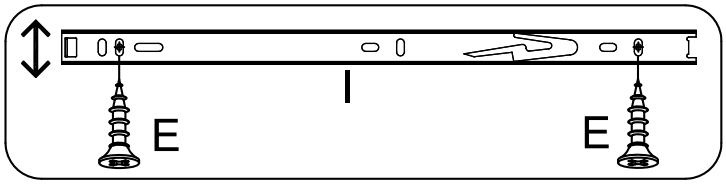

Drawer Rails Adjustment